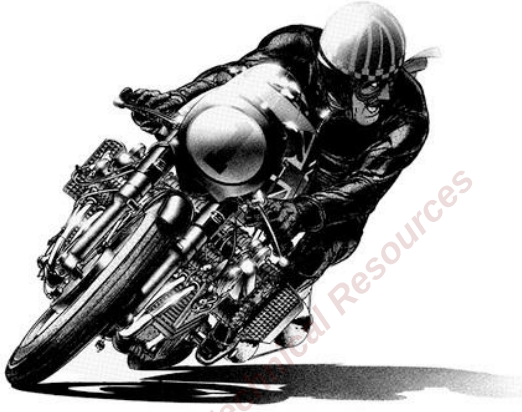

www.ClassicCycles.org

Classic Cycles Technical Resources

AIR CLEANER

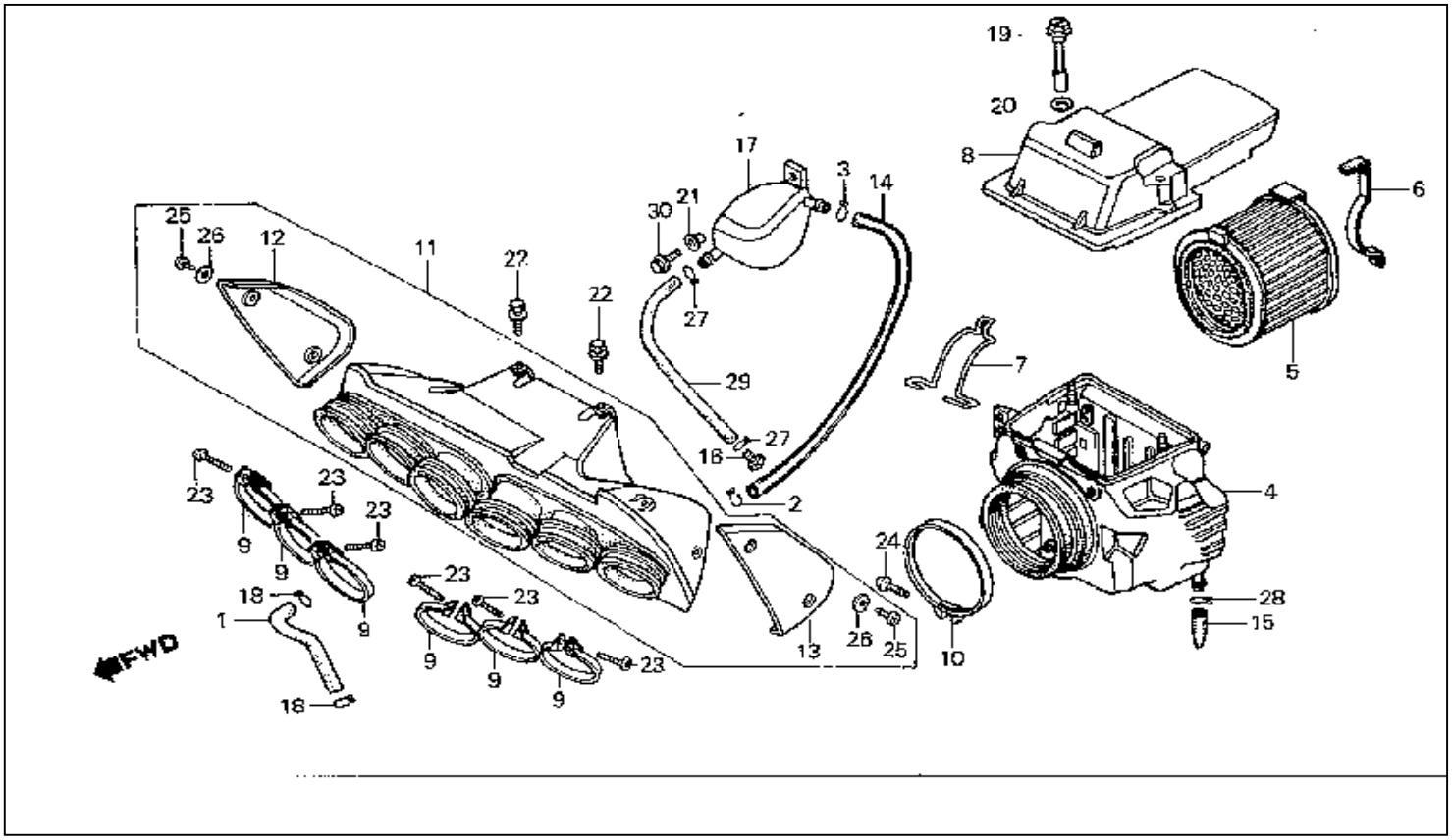

www.ClassicCyclesOrg

1: TUBE, BREATHER
216058-001 $8.33
2: CLIP, BREATHER TUBE
Area Code A 216083-001 $2.27
3: CLIP, BREATHER TUBE
Area Code AC 216089-001 $2.67
4: DISCONTINUED
229176-001
$109.44
5: ELEMENT, AIR CLEANER
229383-001 $39.90
6: DISCONTINUED
230199-001
$14.36
7: DISCONTINUED
231614-001
$999.99
8: DISCONTINUED
231772-001
$45.71
9: BAND (60)
(60) 253141-001 $8.20
10: BAND
181774-001 $8.75
11: DISCONTINUED
182084-001
$999.99
12: DISCONTINUED
182364-001
$26.31
13: DISCONTINUED
182371-001
$26.31
14: DISCONTINUED
182644-001
$11.10
15: TUBE, DRAIN

182668-001 $5.20
16: PLUG, BREATHER TUBE
180920-001 $2.49
17: TANK, STORAGE
49672-001 $23.24
18: CLIP, AIR HOSE (16)
(16) 65909-001 $2.66
19: NUT
234749-001 $5.02
20: WASHER (7X12)
238732-001 $1.05
21: COLLAR
239529-001 $1.42
22: DISCONTINUED
246802-001
$0.53
23: SCREW, PAN (4X20)
(4X20) 247167-001 $0.38
24: SCREW, PAN (5X16)
(5X16) 2333-001 $0.40
25: SCREW, TAP (4X10)
(4X10) 248400-001 $0.40
26: WASHER, PLAIN (4MM)
(4MM) 249232-001 $0.38
27: CLIP, TUBE (B12.5)
(B12.5) 250439-001 $0.45
28: CLIP, TUBE (C11)
(C11) 250471-001 $0.61
29: DISCONTINUED
252977-001
$6.80
30: BOLT, FLANGE (6X16)
(6X16) 253349-001 $0.49

Classic Cycles Technical Resources

AUTOMATIC FUEL COCK

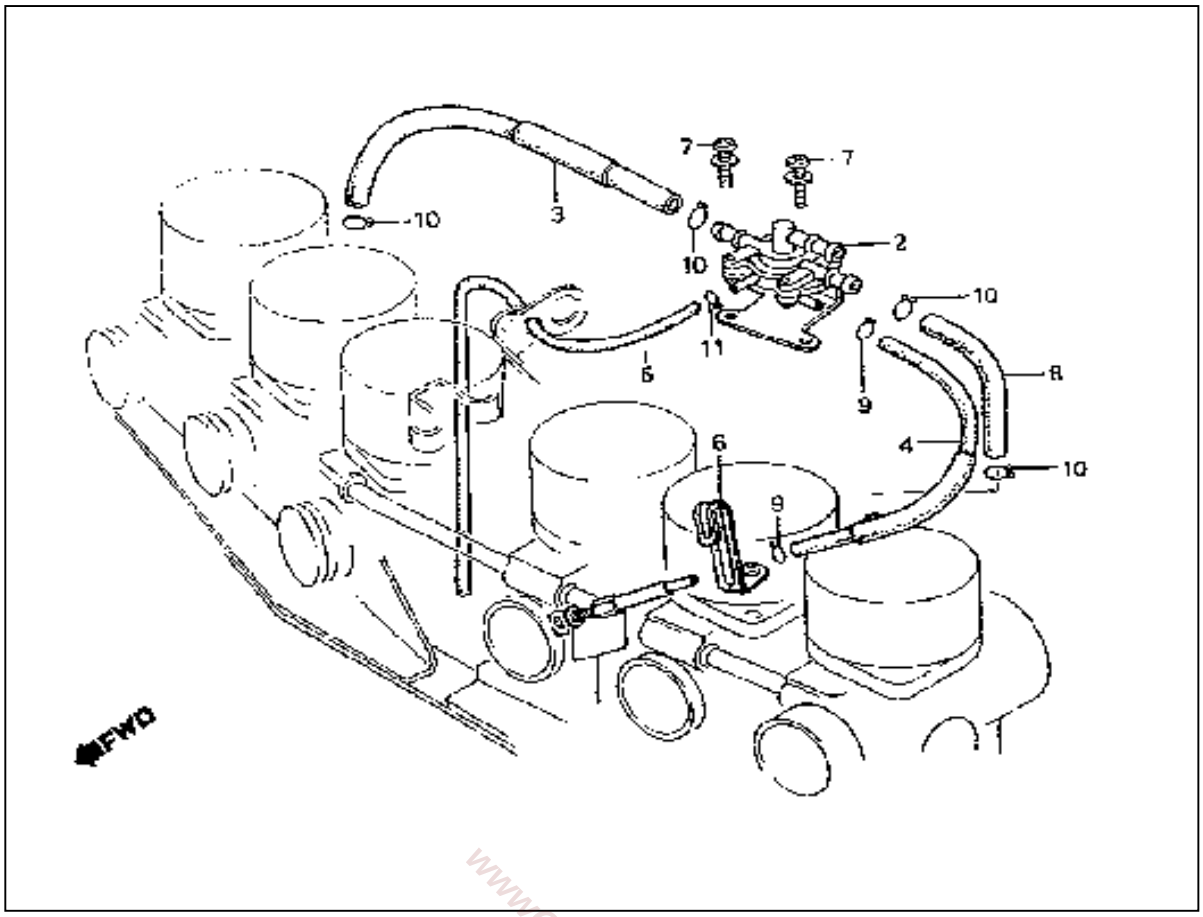

www.ClassicCyclesOrg

1: DISCONTINUED
218198-001
$16.78
2: DISCONTINUED
228502-001
$149.91
3: DISCONTINUED
228522-001
$10.00
4: TUBE, VACUUM
228531-001 $10.26
5: DISCONTINUED
228537-001
$999.99
6: BINDER
222686-001 $3.05
7: SCREW-WASHER (5X20)
(5X20) 248019-001 $0.52
8: DISCONTINUED
250303-001
$1.78
9: CLIP, TUBE (B7)
(B7) 250428-001 $0.63
10: CLIP, TUBE (B12)
(B12) 250436-001 $0.71
11: CLIP, TUBE (B6.5)
(B6.5) 250441-001 $0.63

BATTERY

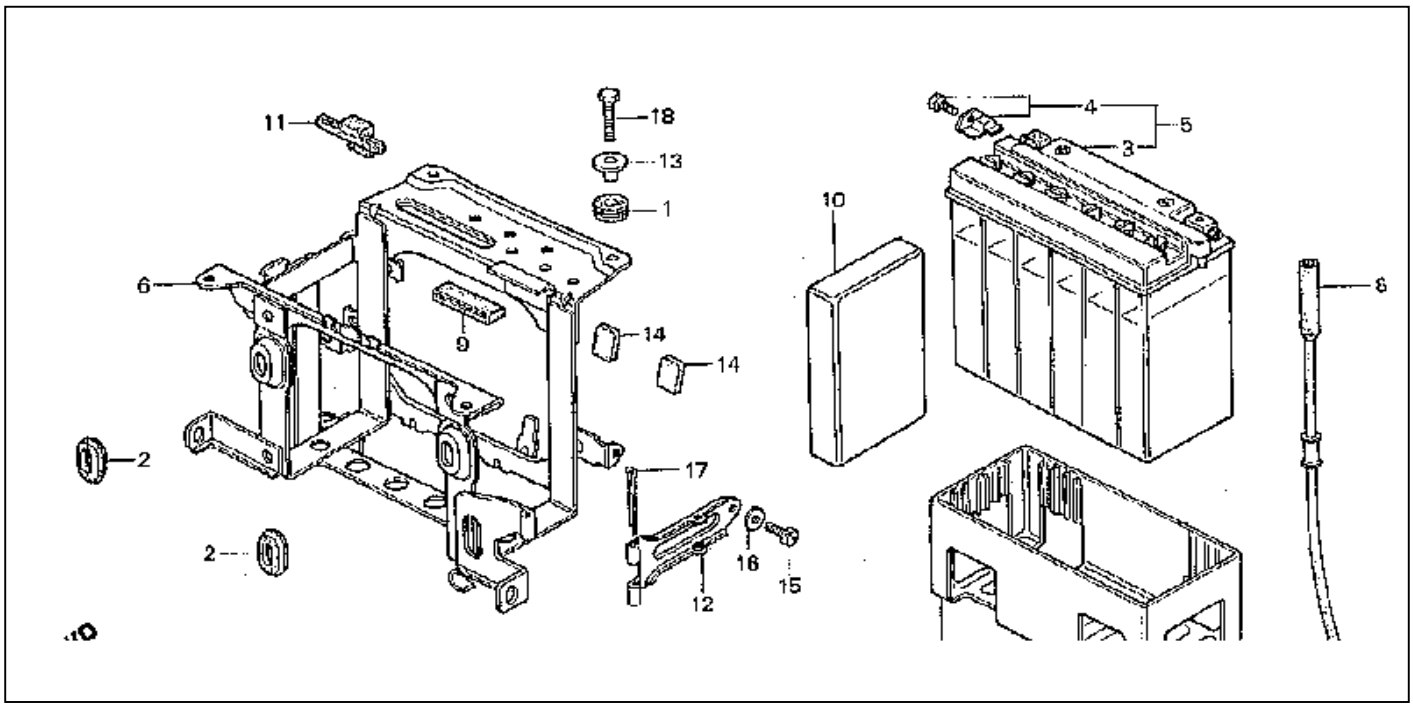

1: RUBBER
Area Code AC 231906-001 $2.22
2: GROMMET A
231942-001 $5.49
3: BATTERY (Y50-N18L-A)
166834-001 $64.99
3: BATTERY (YB18L-A)
(12V18A) 166920-001 $63.99
4: DISCONTINUED
167048-001
$999.99
5: BATTERY (Y50-N18L-A)
166834-001 $64.99
6: DISCONTINUED
131615-001
$136.38
7: DISCONTINUED
131700-001
$16.06
8: DISCONTINUED
131796-001
$11.52
9: DISCONTINUED
131823-001
$4.84
10: DISCONTINUED
131856-001
$6.67
11: DISCONTINUED
131877-001
$4.24
12: PLATE
131902-001 $12.13
13: COLLAR, FR. FENDER
115961-001 $3.71
14: DISCONTINUED
99937-001
$2.05
15: DISCONTINUED
235417-001
$0.69
16: WASHER, PLAIN (6MM)

Classic Cycles Technical Resources

(6MM) 249242-001 $0.38
17: PIN, COTTER (4X55)
249406-001 $0.58
18: BOLT, FLANGE (6X20)
(6X20) 253360-001 $0.

www.ClassicCyclesOrg

BRAKE PEDAL CHANGE PEDAL

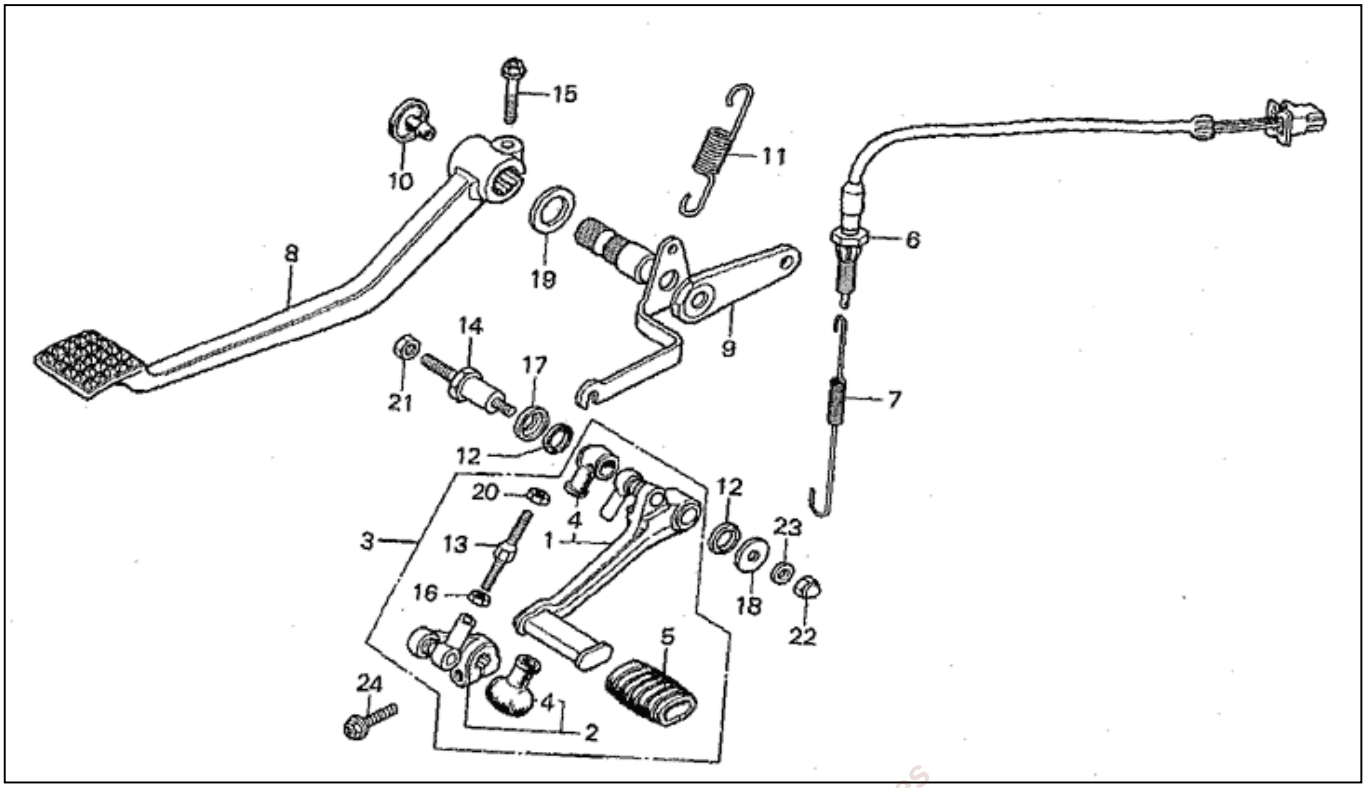

Classic Cycles Technical Resources

1: PEDAL, GEARSHIFT
176757-001 $91.64
1: DISCONTINUED
176758-001
$86.16
2: DISCONTINUED
177062-001
$54.15
2: DISCONTINUED
177063-001
$67.75
3: DISCONTINUED
177126-001
$128.74
4: COVER, DUST
177178-001 $4.91
5: RUBBER
Area Code A 177220-001 $3.51
6: SWITCH, RR. STOP
(TOYO) 155464-001 $14.64
7: SPRING, STOP SWITCH
155620-001 $4.25
8: DISCONTINUED
135620-001
$999.99
9: DISCONTINUED
135803-001
$43.78
10: DISCONTINUED
135883-001
$2.13
11: DISCONTINUED
134080-001
$5.42
12: DISCONTINUED
134244-001
$3.09
13: DISCONTINUED

79421-001
$8.55
13: DISCONTINUED
79422-001
$6.56
14: DISCONTINUED
79800-001
$12.98
15: BOLT (8X30)
235891-001 $5.02
16: NUT
236021-001 $0.55
17: DISCONTINUED
238738-001
$1.98
18: DISCONTINUED
238908-001
$1.98
19: DISCONTINUED
239129-001
$999.99
20: NUT, HEX. (6MM)
(6MM) 249040-001 $0.62
21: NUT, HEX. (10MM)
249062-001 $0.62
22: NUT, CAP (8MM)
249140-001 $0.83
23: WASHER, PLAIN (8MM)
249245-001 $0.29
24: DISCONTINUED
253236-001
$0.70

www.ClassicCyclesOrg

CAM CHAIN TENSIONER

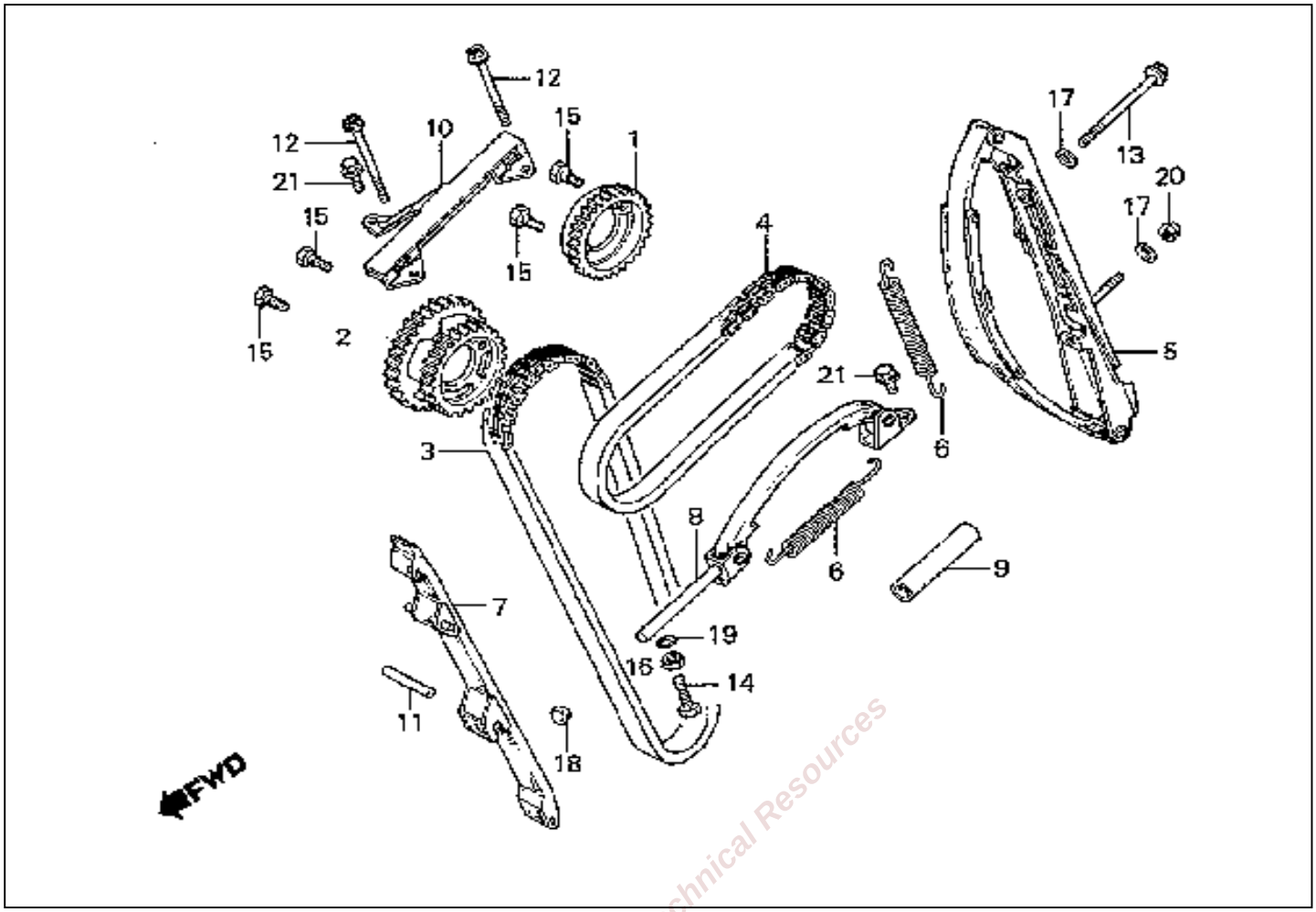

Classic Cycles Technical Resources

1: DISCONTINUED
210423-001
$50.48
2: DISCONTINUED
210469-001
$61.60
3: CHAIN, CAM
Fr_Sr_No_From 2402953 210577-001 $158.33
4: CHAIN B, CAM
Fr_Sr_No_From 2308082 210607-001 $114.75
5: TENSIONER A
211161-001 $124.44
6: SPRING, TENSIONER
211233-001 $5.47
7: GUIDE A, CAM CHAIN
211291-001 $37.05
8: TENSIONER B
211368-001 $77.75
9: TUBE
211406-001 $4.32
10: DISCONTINUED
211449-001
$29.53
11: DISCONTINUED
211690-001
$1.47
12: DISCONTINUED
81740-001
$2.44
13: DISCONTINUED
80192-001
$1.98

14: BOLT
Fr_Sr_No_From 2116819 80666-001 $5.47
15: BOLT (7X12)
(7X12) 79663-001 $1.64
16: NUT, FLANGE (10MM)
Fr_Sr_No_From 2116819 236088-001 $3.31
17: WASHER (6MM)
(6MM) 237864-001 $0.80
18: SEAL, PLUG (11.5X7)
243070-001 $3.71
19: O-RING (7.7X2.3)
(7.7X2.3) (ARAI) 243741-001 $1.28
20: NUT, CAP (6MM)
(6MM) 249134-001 $0.83
21: BOLT, FLANGE (6X12)
(6X12) 253333-001 $0.62

www.ClassicCyclesOrg

CAMSHAFT VALVE

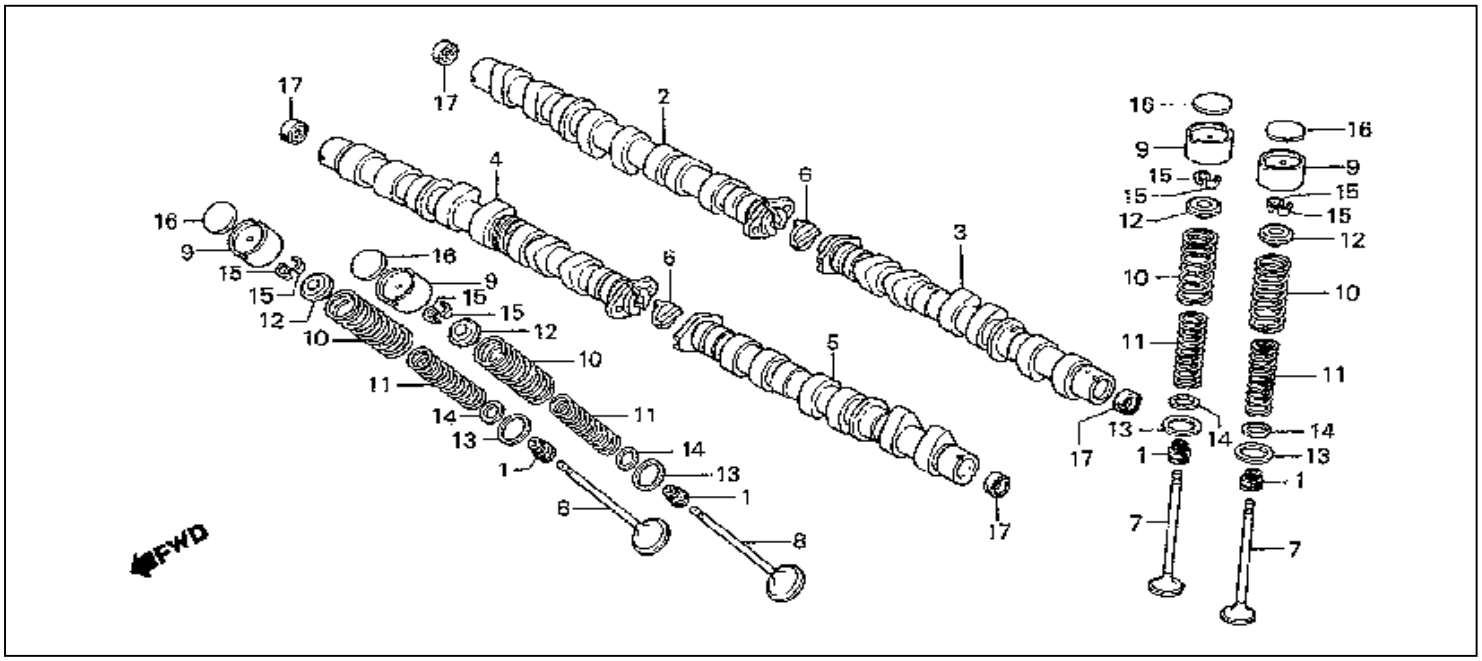

1: SEAL, VALVE STEM
201805-001 $11.11
2: DISCONTINUED
209900-001
$208.04
3: DISCONTINUED
210007-001
$208.04
4: DISCONTINUED
210071-001
$999.99
5: CAMSHAFT, L. EX.
210152-001 $224.22
6: DISCONTINUED
210226-001
$53.71
7: VALVE, IN.
211985-001 $27.82
8: VALVE, EX.
212106-001 $55.80
9: DISCONTINUED
212271-001
$82.22
10: DISCONTINUED
(CHUHATSU) 212371-001
$999.99
10: DISCONTINUED
(NIPPON HATSUJO) 212372-001
$18.71
11: DISCONTINUED
(CHUHATSU) 212544-001
$999.99
11: SPRING, VALVE
(NIPPON HATSUJO) 212545-001 $6.47
12: RETAINER, VLV SPR
212662-001 $5.18
13: SEAT, VALVE SPRING
212732-001 $2.44
14: SEAT, VALVE SPRING
212784-001 $2.40
15: COTTER, VALVE
(SANKO) 212820-001 $1.95
16: SHIM, TAPPET (2.30)

Classic Cycles Technical Resources

(2.30) 212952-001 $7.51
16: DISCONTINUED
(2.35) 212959-001
$6.62
16: SHIM, TAPPET (2.40)
(2.40) 212966-001 $7.51
16: SHIM, TAPPET (2.45)
(2.45) 212973-001 $7.51
16: SHIM, TAPPET (2.50)
(2.50) 212980-001 $7.51
16: SHIM, TAPPET (2.55)
(2.55) 212989-001 $7.51
16: SHIM, TAPPET (2.60)
(2.60) 212998-001 $7.51
16: SHIM, TAPPET (2.65)
(2.65) 213006-001 $7.51
16: SHIM, TAPPET (2.70)
(2.70) 213013-001 $7.51
16: SHIM, TAPPET (2.75)
(2.75) 213021-001 $8.16
16: SHIM, TAPPET (2.80)
(2.80) 213030-001 $8.16
16: SHIM, TAPPET (2.85)
(2.85) 213040-001 $7.51
16: SHIM, TAPPET (2.90)
(2.90) 213048-001 $7.51
16: SHIM, TAPPET (2.95)
(2.95) 213055-001 $7.51
16: SHIM, TAPPET (3.00)
(3.00) 213062-001 $7.51
16: SHIM, TAPPET (3.05)
(3.05) 213067-001 $7.51
16: DISCONTINUED
(3.10) 213072-001
$7.02
16: DISCONTINUED
(3.15) 213080-001
$6.62
16: DISCONTINUED
(3.20) 213085-001
$7.18
16: SHIM, TAPPET (3.25)
(3.25) 213090-001 $7.51
16: DISCONTINUED
(3.30) 213096-001
$6.62
16: DISCONTINUED
(3.35) 213104-001
$6.62
16: DISCONTINUED
(3.40) 213113-001
$999.99
16: SHIM, TAPPET (3.45)
(3.45) 213119-001 $7.51
16: DISCONTINUED
(3.50) 213126-001
$6.62
17: DISCONTINUED
242867-001
$4.33

www.ClassicCyclesOrg

CARBURETOR (ASSY. LINK)

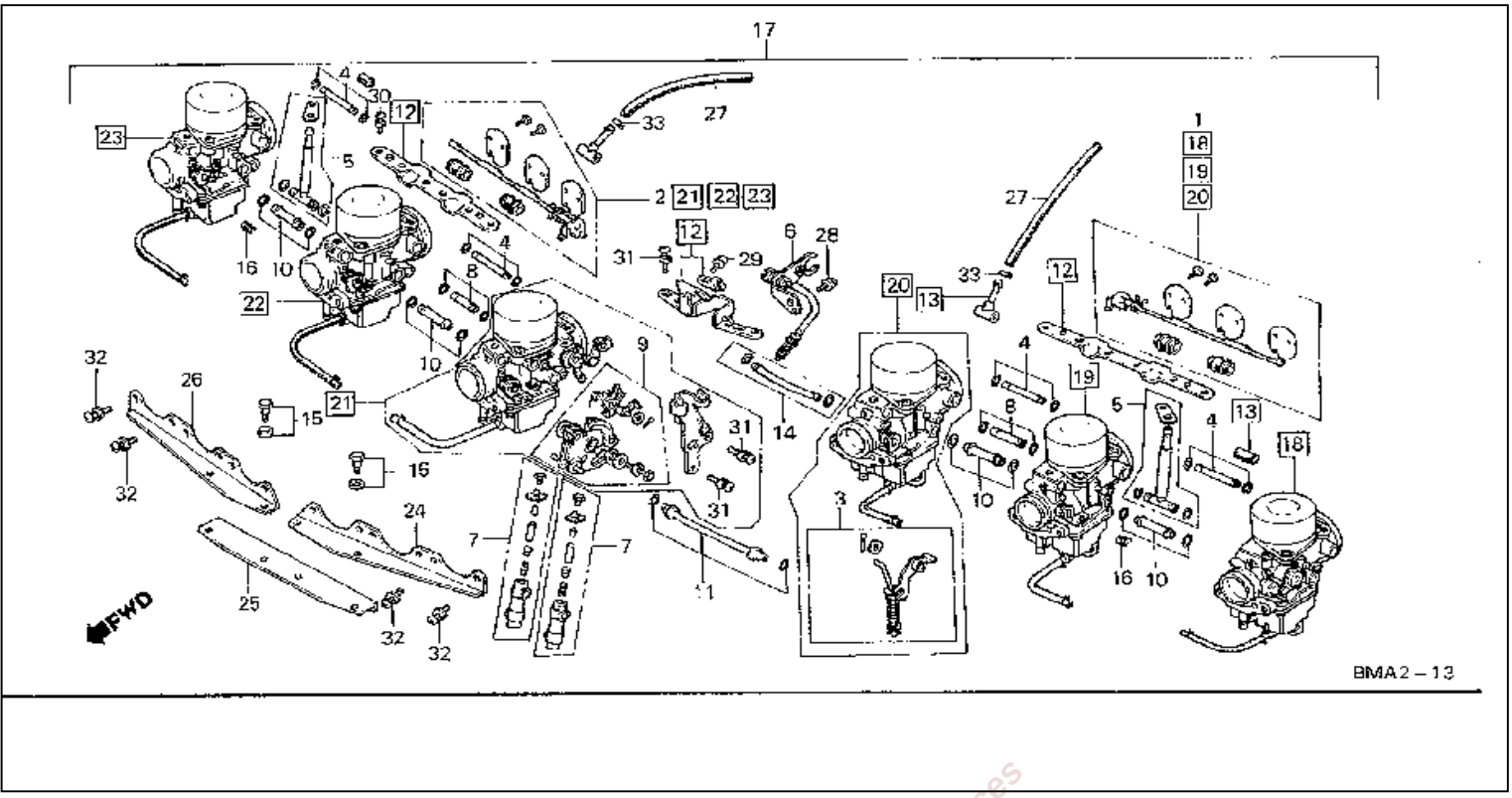

Classic Cycles Technical Resources

1: DISCONTINUED
217637-001
$82.44
2: DISCONTINUED
217697-001
$102.20
3: DISCONTINUED
217735-001
$51.60
4: DISCONTINUED
218192-001
$18.38
5: JOINT SET B, FUEL
218242-001 $52.07
6: DISCONTINUED
218313-001
$65.82
7: DISCONTINUED
218451-001
$121.51
8: DISCONTINUED
218472-001
$999.99
9: LINK SET, THROTTLE
218526-001 $229.40
10: DISCONTINUED
218548-001
$40.56
11: DISCONTINUED
218553-001
$49.87
12: DISCONTINUED
218571-001
$156.05
13: DISCONTINUED
218616-001
$23.82
14: DISCONTINUED

218623-001
$40.38
15: SCREW SET E
218947-001 $19.18
16: DISCONTINUED
219044-001
$4.58
17: CARBURETOR ASSY.
219935-001 $2,247.36
18: DISCONTINUED
220816-001
$999.99
19: CARBURETOR ASSY. 2
221262-001 $435.76
20: CARBURETOR ASSY. 3
221630-001 $481.60
21: CARBURETOR ASSY. 4
221845-001 $435.76
22: CARBURETOR ASSY. 5
222008-001 $435.76
23: CARBURETOR ASSY. 6
222028-001 $413.22
24: DISCONTINUED
222414-001
$51.36
25: DISCONTINUED
222466-001
$55.51
26: DISCONTINUED
222488-001
$51.36
27: TUBE
222856-001 $4.74
28: SCREW-WASHER (4X8)
(4X8) 247966-001 $0.29
29: SCREW-WASHER (4X12)
(4X12) 247974-001 $0.29
30: SCREW-WASHER (5X12)
(5X12) 248003-001 $0.42
31: SCREW-WASHER (5X16)
(5X16) 248011-001 $0.37
32: SCREW-WASHER (6X14)
248053-001 $0.53
33: CLIP, TUBE (B8)
(B8) 250430-001 $0.63

www.ClassicCyclesOrg

CARBURETOR (COMPONENT PARTS)

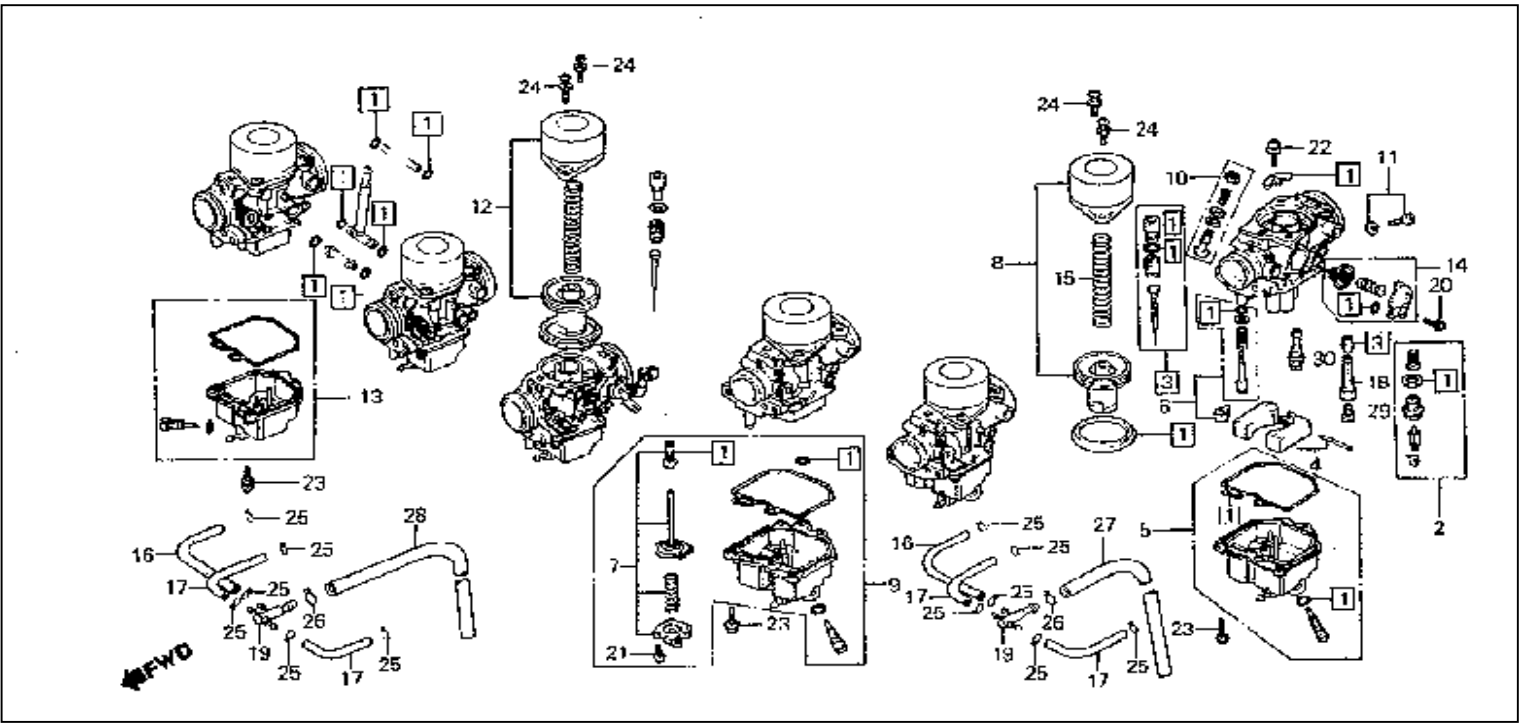

1: GASKET SET
216214-001 $47.15
2: VALVE SET, FLOAT
216428-001 $41.47
3: DISCONTINUED
216655-001
$38.04
4: FLOAT SET
216956-001 $48.18
5: DISCONTINUED
217191-001
$104.55
6: SCREW SET A
217449-001 $15.67
7: DISCONTINUED
217852-001
$62.04
8: PISTON SET, VACUUM
218711-001 $168.78
9: DISCONTINUED
218067-001
$160.55
10: SCREW SET C
218410-001 $9.95
11: DISCONTINUED
218658-001
$6.38
12: PISTON SET, VACUUM
218711-001 $168.78
13: CHAMBER SET C, FLOAT
218750-001 $111.98
14: DISCONTINUED
218918-001
$89.98
15: DISCONTINUED
218955-001
$11.56
16: TUBE
224237-001 $4.20
17: DISCONTINUED

Classic Cycles Technical Resources

222900-001
$3.34
18: HOLDER, NEEDLE JET
223314-001 $14.72
19: DISCONTINUED
225654-001
$7.41
20: SCREW-WASHER (4X10)
(4X10) 247971-001 $0.52
21: SCREW-WASHER (4X12)
(4X12) 247974-001 $0.29
22: SCREW-WASHER (4X12)
247977-001 $0.29
23: SCREW-WASHER (4X16)
(4X16) 247981-001 $0.29
24: SCREW-WASHER (5X16)
(5X16) 248011-001 $0.37
25: CLIP, TUBE (B7)
(B7) 250428-001 $0.63
26: CLIP, TUBE (B8)
(B8) 250430-001 $0.63
27: DISCONTINUED
252991-001
$15.04
28: DISCONTINUED
253008-001
$8.93
29: JET, MAIN (#105)
Area Code AC 255542-001 $5.20

www.ClassicCyclesOrg

CLUTCH

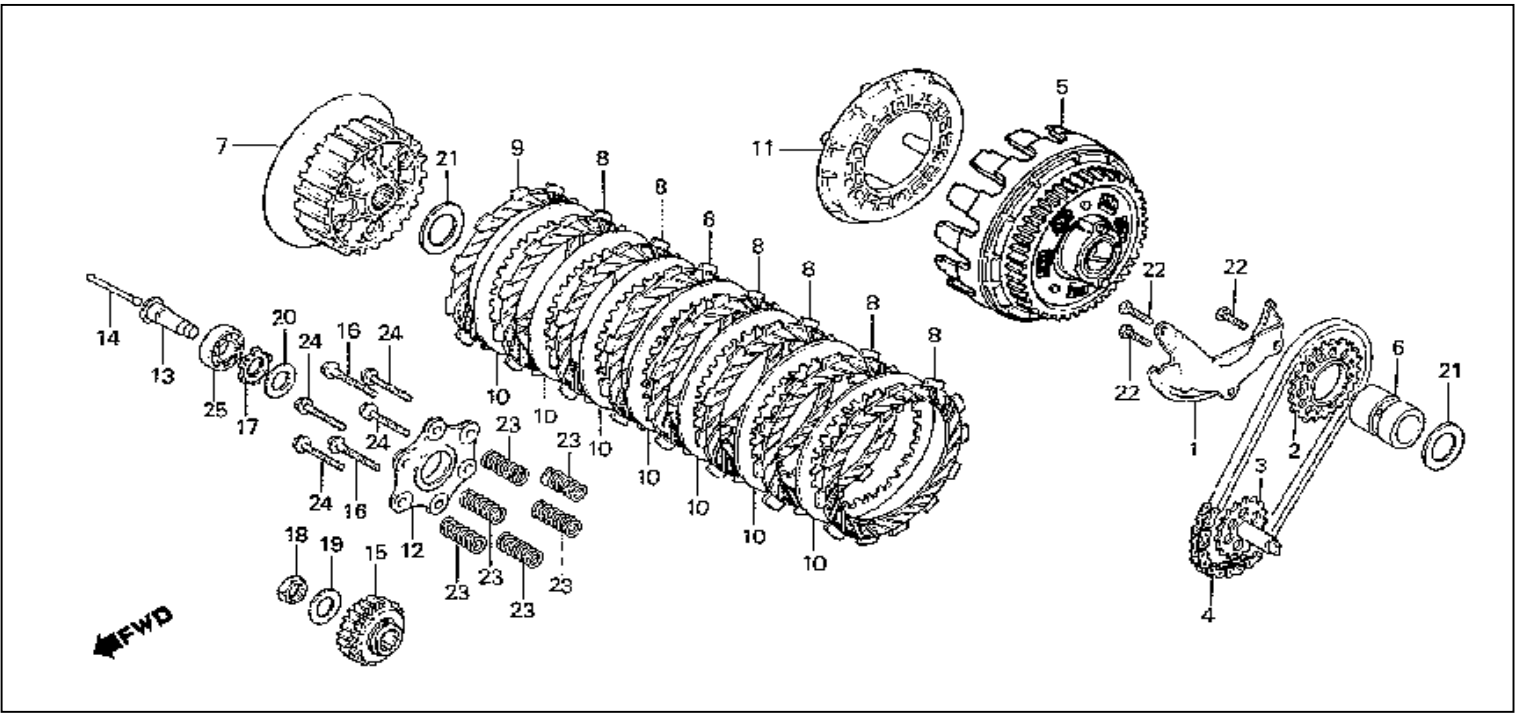

1: DISCONTINUED
197057-001
$25.92
2: SPROCKET (37T)
(37T) 214151-001 $51.87
3: DISCONTINUED
(28T) 214198-001
$61.11
4: DISCONTINUED
214224-001
$32.74
5: DISCONTINUED
63955-001
$300.92
6: DISCONTINUED
65538-001
$26.04
7: CENTER, CLUTCH
65823-001 $124.49
8: DISK A, CL FRICTION
65407-001 $19.15
9: DISK B, CL FRICTION
65425-001 $19.15
10: PLATE, CLUTCH
64502-001 $17.87
11: DISCONTINUED
64526-001
$62.04
12: PLATE, CLUTCH LIFTER
64710-001 $46.11
13: DISCONTINUED
64727-001
$31.29
14: ROD, CLUTCH LIFTER
60548-001 $10.47
15: DISCONTINUED
59332-001
$999.99
16: DISCONTINUED
82135-001
$2.42
17: NUT, LOCK (25MM)

Classic Cycles Technical Resources

79313-001 $1.96
18: NUT, LOCK (22MM)
79322-001 $6.05
19: DISCONTINUED
237728-001
$4.40
20: DISCONTINUED
237780-001
$4.40
21: DISCONTINUED
238358-001
$3.67
22: BOLT, HEX. (6X12)
(6X12) 245596-001 $0.48
23: SPRING, CLUTCH
253102-001 $1.75
24: BOLT, FLANGE (6X25)
253702-001 $0.68
25: BEARING (6004)
(6004) 254157-001 $10.7

www.ClassicCycles.org

CRANKCASE

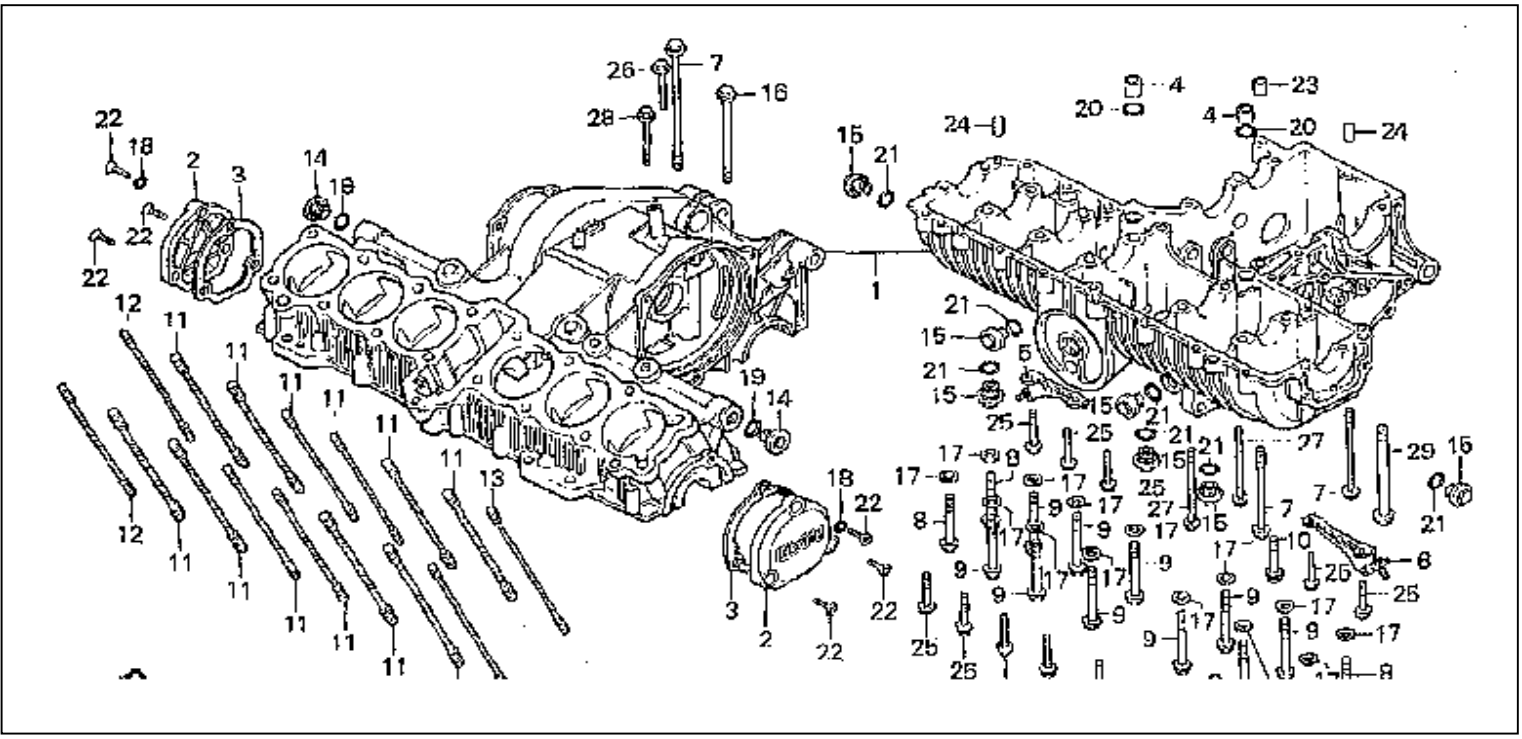

1: CRANKCASE SET
196508-001 $1,951.65
2: CAP, CRANKSHAFT
199978-001 $32.93
3: GASKET, CRANK CAP
200011-001 $3.89
4: COLLAR (18MM)
214685-001 $2.20
5: DISCONTINUED
111443-001
$9.80
6: STAY, L. LEG SHIELD
111509-001 $11.13
7: DISCONTINUED
81831-001
$3.96
8: DISCONTINUED
81833-001
$3.94
9: BOLT, UBS (8X100)
81905-001 $4.11
10: DISCONTINUED
80545-001
$2.60
11: DISCONTINUED
80906-001
$999.99
12: DISCONTINUED
81076-001
$999.99
13: DISCONTINUED
79111-001
$999.99
14: DISCONTINUED
79114-001
$11.42
15: DISCONTINUED
79202-001
$12.11
16: DISCONTINUED

Classic Cycles Technical Resources

79336-001
$5.16
17: WASHER (8.5MM)
238319-001 $1.80
18: O-RING (5.5X1.5)
(5.5X1.5) 243666-001 $1.76
19: O-RING (19.8X2.4)
(19.8X2.4) 244088-001 $1.47
20: O-RING (18X3)
(18X3) 244003-001 $1.84
21: O-RING (18X2.4)
(18X2.4) 244087-001 $1.55
22: SCREW, OVAL (6X25)
247788-001 $0.70
23: PIN, DOWEL (10X16)
(10X16) 2268-001 $1.08
24: PIN, DOWEL (10X16)
(10X16) 249471-001 $1.13
25: BOLT, FLANGE (6X35)
(6X35) 253388-001 $0.67
26: BOLT, FLANGE (6X65)
(6X65) 253246-001 $0.98
27: BOLT, FLANGE (6X125)
(6X125) 254054-001 $1.71
28: BOLT, FLANGE (8X70)
(8X70) 253537-001 $1.07
29: DISCONTINUED
253310-001
$2.13

www.ClassicCyclesOrg

CRANKSHAFT PISTON

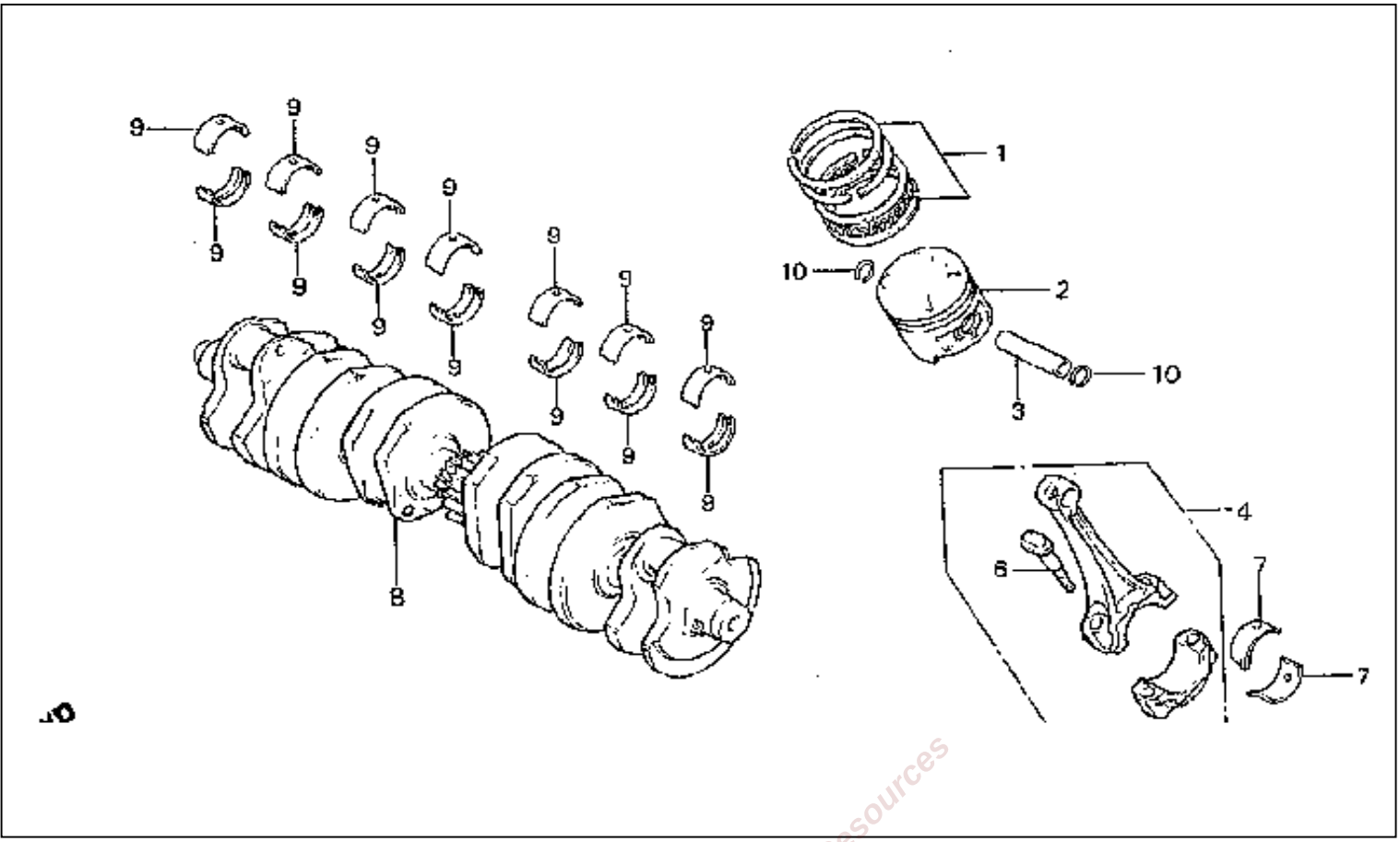

Classic Cycles Technical Resources

1: RING SET (STD)
(STD.) 204159-001 $42.38
1: RING SET (OS 0.25)
(0.25) (RIKEN) 204677-001 $42.38
1: RING SET (OS 0.50)
(0.50) (RIKEN) 204862-001 $42.38
1: DISCONTINUED
(0.75) (RIKEN) 205027-001
$33.35
1: DISCONTINUED
(0.75) (TEIKOKU) 205028-001
$33.35
1: RING SET (1.00)
(1.00) (TEIKOKU) 205191-001 $42.38
2: PISTON (STD)
(STD.) 205407-001 $57.07
2: PISTON (OS 0.25)
(0.25) 205789-001 $57.07
2: PISTON (OS 0.50)
(0.50) 206120-001 $57.07
2: DISCONTINUED
(0.75) 206425-001
$999.99
2: DISCONTINUED
(1.00) 206639-001
$999.99
3: PIN, PISTON
206790-001 $14.16
4: ROD A, CONNECTING
207211-001 $162.71
4: ROD C, CONNECTING
207273-001 $156.09
4: DISCONTINUED
207314-001
$999.99
4: DISCONTINUED

207319-001
$999.99
5: NUT, CONNECTING ROD
207300-001 $2.83
6: BOLT, CONNECTING ROD
(NAGOYA NEJI) 207281-001 $6.30
7: BEARING A, CONN ROD
(BLUE) (NIPPON DIA CLEVITE) 207467-001 $8.24
7: BEARING B, CONN ROD
(BLACK)(TAIHO) 207487-001 $9.82
7: BEARING C, CONN ROD
(BROWN)(TAIHO) 207520-001 $9.82
7: BEARING D, CONN ROD
(GREEN) (NIPPON DIA CLEVITE) 207554-001 $9.82
7: BEARING E, CONN ROD
(YELLOW)(TAIHO) 207586-001 $10.31
8: DISCONTINUED
207800-001
$794.98
9: BRG E, CRANKSHAFT
(BLUE)(DAIDO) 208306-001 $11.24
9: BEARING A
(BLACK)(DAIDO) 208332-001 $11.24
9: BRG B, CRANKSHAFT
(BROWN)(DAIDO) 208367-001 $11.24
9: BRG C, CRANKSHAFT
(GREEN)(DAIDO) 208401-001 $10.96
9: BRG D, CRANKSHAFT
(YELLOW)(DAIDO) 208425-001 $12.51
10: CLIP (15MM)
(15MM) 2285-001 $0.65

www.ClassicCyclesOrg

CYLINDER

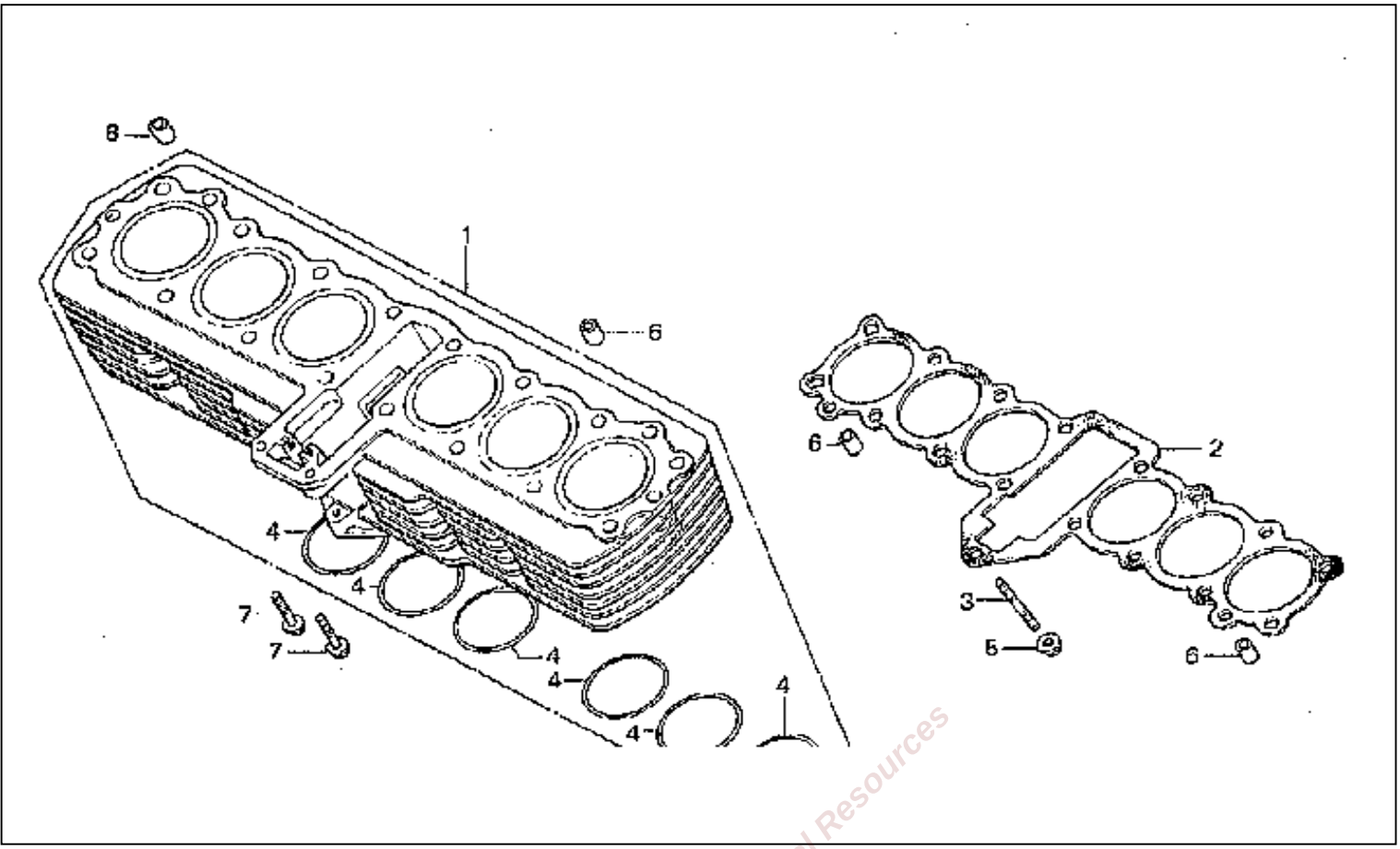

Classic Cycles Technical Resources

1: CYLINDER
200932-001 $934.60
2: GASKET, CYLINDER
201239-001 $15.51
3: BOLT, STUD (6X33)
(6X40) 81074-001 $1.69
4: O-RING (69.8X2.0)
243902-001 $5.51
5: NUT, FLANGE (6MM)
(6MM) 2298-001 $0.62
6: PIN, DOWEL (10X16)
(10X16) 2268-001 $1.08
7: DISCONTINUED
253236-001
$0.70

CYLINDER HEAD

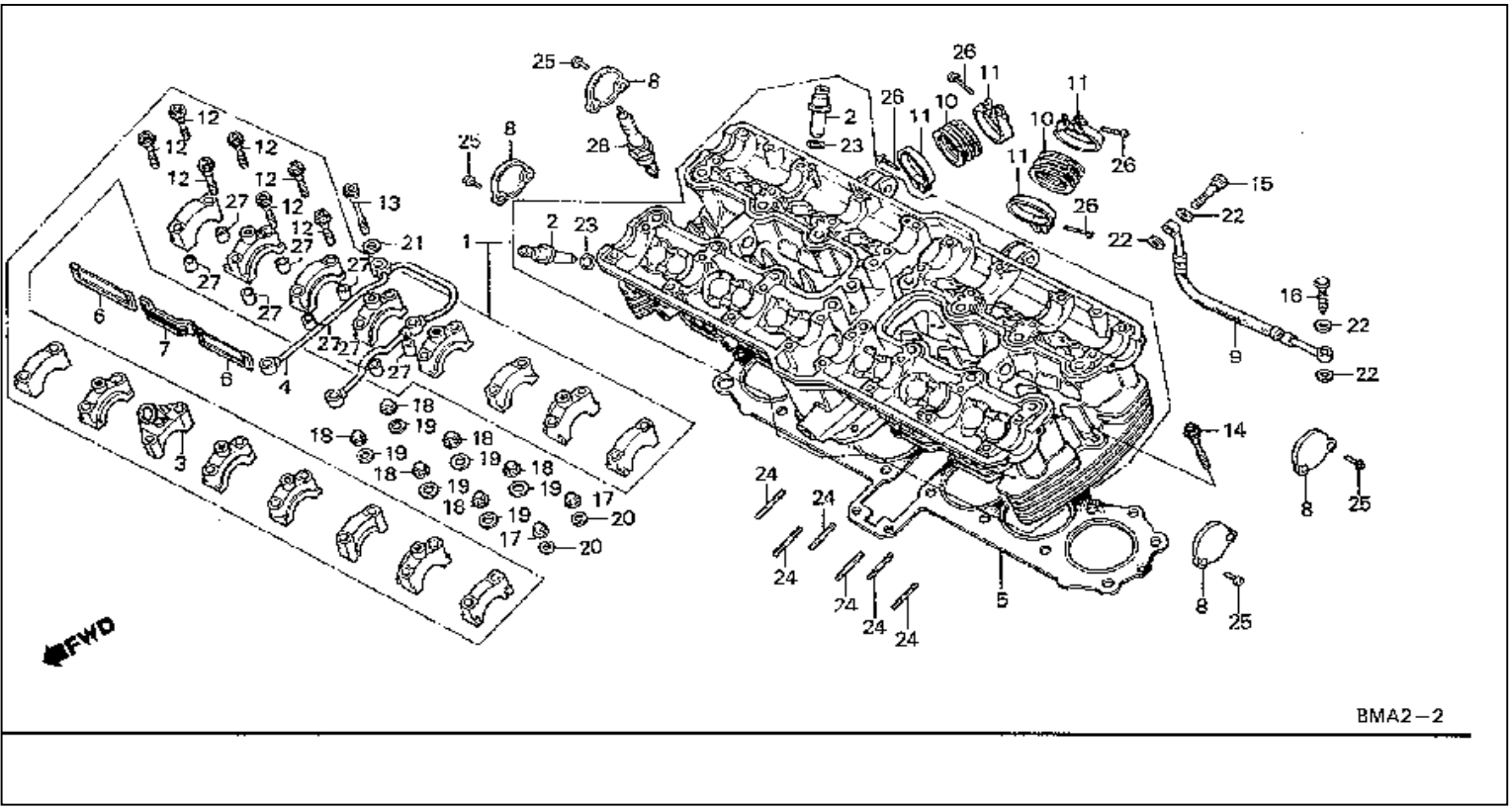

1: CYLINDER HEAD ASSY.
200450-001 $1,282.73
2: GUIDE, VALVE
201720-001 $13.40
3: DISCONTINUED
201960-001
$19.45
4: DISCONTINUED
202088-001
$68.42
5: GASKET, CYL HD
202251-001 $120.05
6: DISCONTINUED
202518-001
$6.96
7: DISCONTINUED
202520-001
$9.04
8: CAP, HEAD COVER
202899-001 $17.87
9: DISCONTINUED
215181-001
$999.99
10: INSULATOR
224947-001 $19.18
11: BAND, INSULATOR
225195-001 $7.58
12: BOLT, FLANGE (6X48)
81611-001 $2.24
13: DISCONTINUED
81740-001
$2.44
14: DISCONTINUED
80280-001
$3.38
15: BOLT, OIL
80791-001 $5.87
16: DISCONTINUED
79245-001

www.ClassicCyclesOrg

$17.27
17: NUT (8MM)
236130-001 $2.24
18: DISCONTINUED
236150-001
$2.67
19: WASHER (10MM)
Fr_Sr_No_To 2026308 237331-001 $4.67
20: WASHER (8MM)
(8MM) 237861-001 $3.31
21: WASHER (6MM)
(6MM) 237891-001 $1.40
22: WASHER, OIL BOLT
(10.2X15X1.4) 2351-001 $1.98
23: O-RING (10X1.6)
(10X1.6) 243665-001 $2.07
24: DISCONTINUED
246114-001
$0.82
25: SCREW, PAN (5X12)
(5X12) 247236-001 $0.60
26: SCREW, PAN (5X20)
(5X20) 247256-001 $0.40
27: PIN, DOWEL (8X14)
(8X14) 2267-001 $0.92
28: SPARK PLUG (DR8ES-L)
(DR8ES-L NGK) 255102-001 $2.32
28: SPARK PLUG (D7EA)
(D7EA NGK) 255110-001 $2.17
28: SPARK PLUG (DR7ES)
(DR7ES) (NGK) 255111-001 $2.17
28: S/PLG (X22ESR-U)
(X22ESR-U) (DENSO) 255113-001 $2.24
28: SPARK PLUG (X22ES-U)
(X22ES-U ND) 255114-001 $1.92
28: SPARK PLUG (D8EA)
(D8EA NGK) 255120-001 $2.17
28: SPARK PLUG (DR8ES)
(DR8ES) (NGK) 255121-001 $2.32
28: S/PLG (X24ESR-U)
(X24ESR-U) (DENSO) 255122-001 $2.24
28: SPARK PLUG (X24ES-U)
(X24ES-U ND) 255123-001 $1.92
28: SPARK PLUG (D9EA)
(D9EA NGK) 255129-001 $2.17
28: S/PLG (X27ESR-U)
(X27ESR-U) (DENSO) 255130-001 $2.24
28: SPARK PLUG (X27ES-U)
(X27ES-U ND) 255131-001 $1.92

Classic Cycles Technical Resources

CYLINDER HEAD COVER

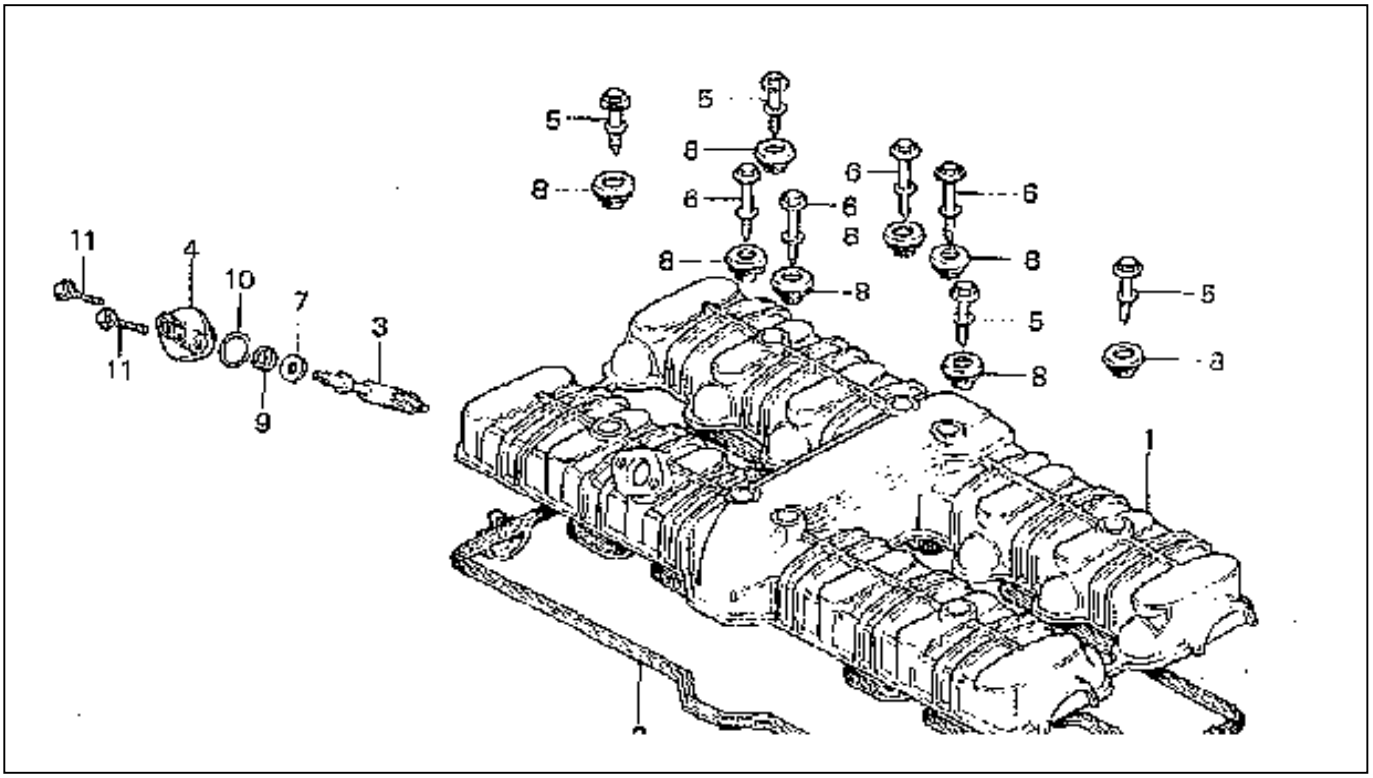

1: DISCONTINUED
202812-001
$323.64
2: GASKET, CYL HD CVR
203472-001 $54.98
3: DISCONTINUED
203611-001
$999.99
4: DISCONTINUED
203631-001
$28.94
5: BOLT, SPECIAL (6MM)
80547-001 $4.02
6: BOLT, SPECIAL (6X40)
79102-001 $9.98
7: WASHER, THRUST (8MM)
(8MM) 238503-001 $2.16
8: RUBBER, SETTING
Fr_Sr_No_From 2400816 239826-001 $5.07
9: OIL SEAL (8X16X6)
243071-001 $1.60
9: OIL SEAL (8X16X6)
(NOK) 243083-001 $1.60
10: O-RING (19.8X2.4)
(19.8X2.4) 244088-001 $1.47
11: BOLT, FLANGE (6X18)
(6X18) 2334-001 $0.75

www.ClassicCyclesOrg

EXHAUST MUFFLER

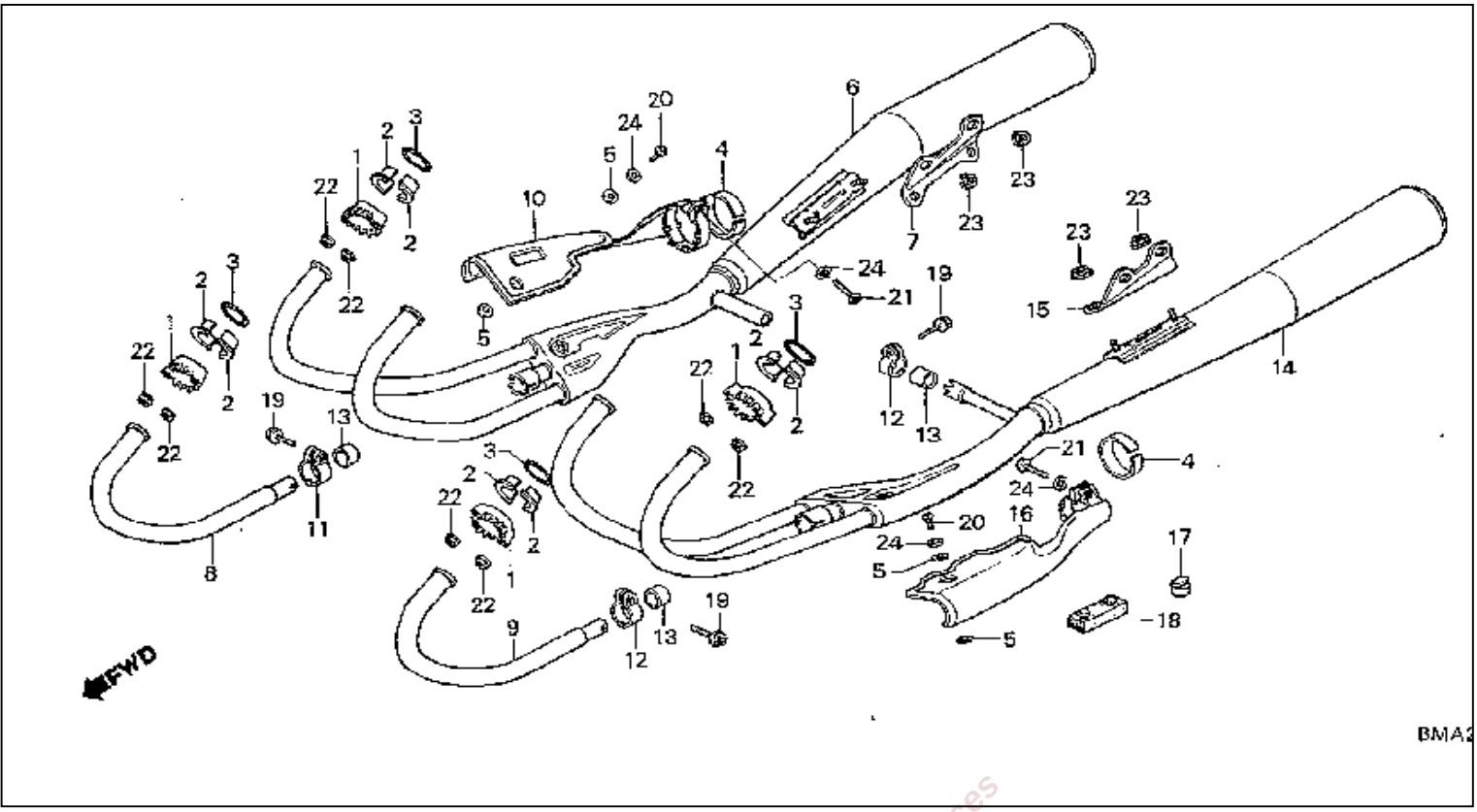

1: DISCONTINUED
76462-001
$999.99
2: COLR, EX. PIPE JOINT
76541-001 $8.25
3: GASKET, EX. PIPE
76727-001 $3.65
4: GASKET, PROTECTOR
76315-001 $7.36
5: GASKET, PROTECTOR
Fr_Sr_No_To GM022084 76287-001 $2.76
6: MUFFLER, R. EX.
70483-001 $435.13
7: DISCONTINUED
69567-001
$16.69
8: DISCONTINUED
69704-001
$94.85
9: PIPE 5, EX.
72647-001 $107.76
10: PROTR, R. CHAMBER
70930-001 $131.11
11: DISCONTINUED
71507-001
$999.99
12: DISCONTINUED
71498-001
$999.99
13: GASKET, MUFFLER
71463-001 $13.51
14: DISCONTINUED
71583-001
$999.99
15: DISCONTINUED
71141-001
$16.69
16: DISCONTINUED

Classic Cycles Technical Resources

71211-001
$103.18
17: RUBBER
129325-001 $4.31
18: DISCONTINUED
129576-001
$3.78
19: BOLT (8X30)
235891-001 $5.02
20: SCREW, PAN (6X10)
(6X10) Area Code AC 247347-001 $0.87
21: SCREW, PAN (6X16)
(6X16) 247372-001 $0.52
22: NUT, FLANGE (6MM)
(6MM) 2298-001 $0.62
23: NUT, FLANGE (8MM)
(8MM) 249200-001 $0.22
24: WASHER, PLAIN (6MM)
(6MM) 249240-001 $0.52

www.ClassicCyclesOrg

FAIRING

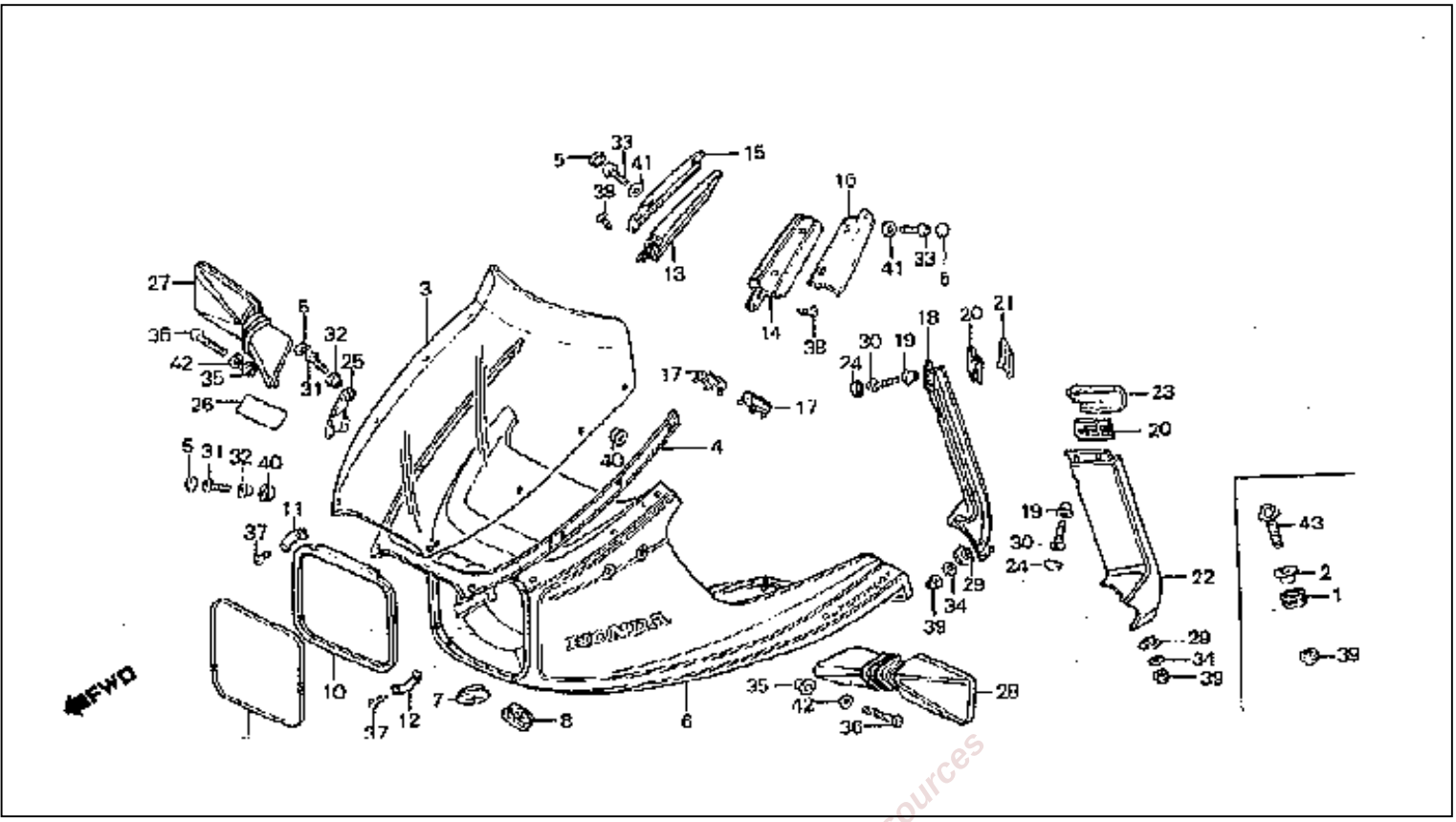

Classic Cycles Technical Resources

1: RUBBER, FR.
115912-001 $2.07
2: COLLAR, SETTING
115960-001 $4.67
3: DISCONTINUED
113698-001
$311.35
4: DISCONTINUED
113748-001
$82.62
5: CAP, SCREEN SCREW
111853-001 $2.33
6: DISCONTINUED
(MAGNUM SILVER) 112391-001
$697.79
7: DISCONTINUED
112704-001
$4.78
8: PLUG, HEADLIGHT CASE
112721-001 $7.13
9: DISCONTINUED
112731-001
$999.99
10: RUBBER
110765-001 $37.51
11: DISCONTINUED
110782-001
$3.38
12: DISCONTINUED
110805-001
$3.38
13: DISCONTINUED
111019-001
$999.99
14: PAD, L. PILLAR
111031-001 $26.56

15: DISCONTINUED
(MAGNUM SILVER) 111053-001
$16.65
16: DISCONTINUED
(MAGNUM SILVER) 111064-001
$16.40
17: CAP, SUB-METER
111367-001 $11.96
18: DISCONTINUED
(MAGNUM SILVER) 111415-001
$59.40
19: COLLAR
111454-001 $3.45
20: DISCONTINUED
111459-001
$5.05
21: DISCONTINUED
111463-001
$11.78
22: DISCONTINUED
(MAGNUM SILVER) 111473-001
$66.42
23: DISCONTINUED
111525-001
$11.78
24: CAP
111549-001 $2.33
25: PLATE, WINDSHIELD
107984-001 $3.84
26: DISCONTINUED
84769-001
$3.98
27: DISCONTINUED
82380-001
$999.99
28: DISCONTINUED
82613-001
$999.99
29: DISCONTINUED
Fr_Sr_No_To 301609 81781-001
$3.04
30: DISCONTINUED
82010-001
$2.05
31: SCREW
82056-001 $1.93
32: COLR, SCREEN SETTING
82102-001 $1.49
33: SCREW B
80129-001 $1.49
34: WASHER (6X20)
Fr_Sr_No_To 301609 239330-001 $1.80
35: COLLAR
239529-001 $1.42
36: SCREW, PAN (6X28)
247401-001 $0.67
37: DISCONTINUED
248385-001
$0.38
38: SCREW, TAP (4X12)
248538-001 $0.40
39: NUT, CAP (6MM)
(6MM) 249134-001 $0.83
40: NUT, FLANGE (4MM)
(4MM) 249185-001 $0.53
41: WASHER, PLAIN (4MM)
(4MM) 249232-001 $0.38

www.ClassicCyclesOrg

42: WASHER, PLAIN (6MM)
(6MM) 249239-001 $0.22
43: BOLT, FLANGE (6X22)
(6X22) 253363-001 $0.63

Classic Cycles Technical Resources

FAIRING POCKET

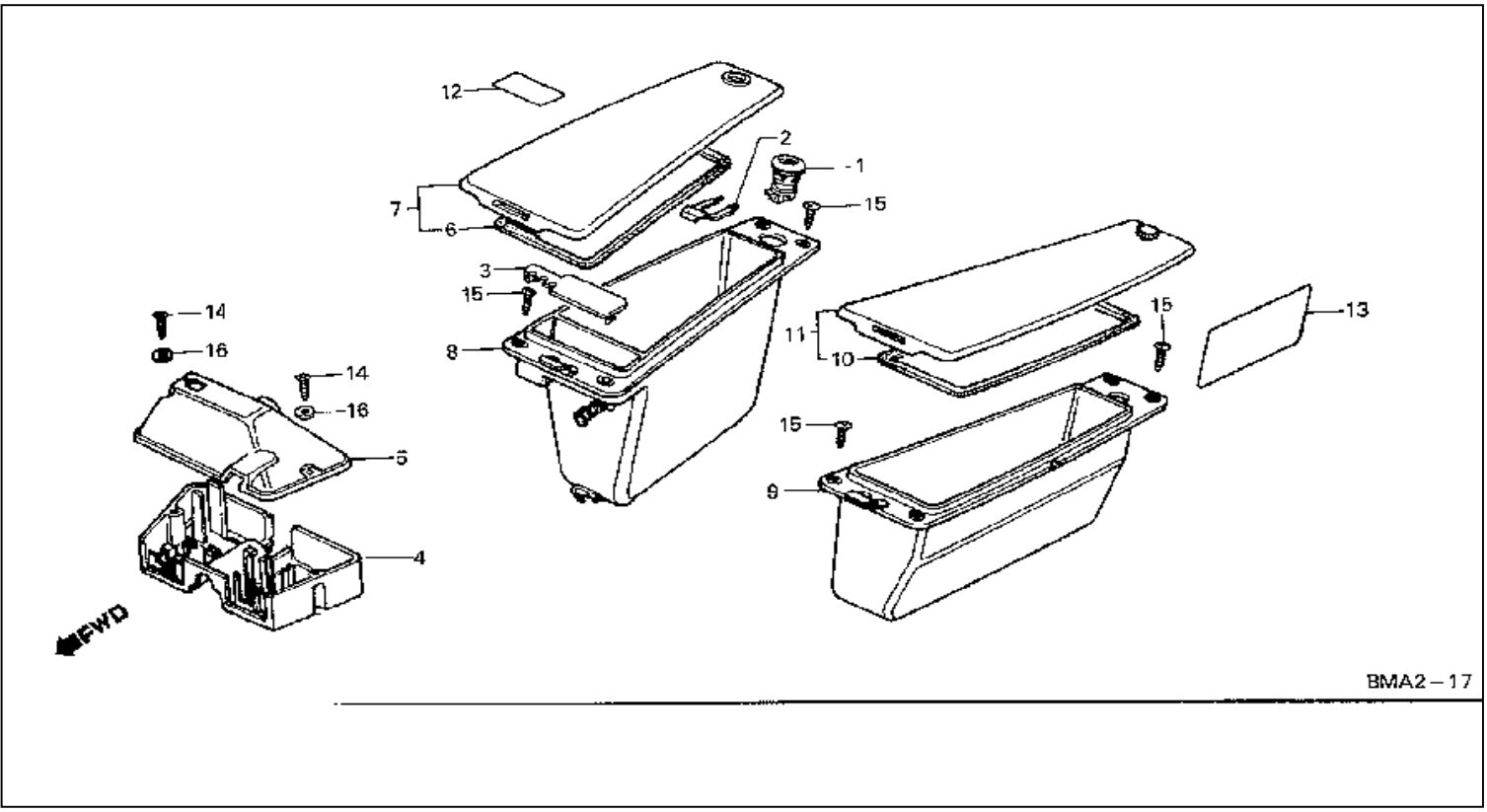

1: LOCK, FILLER LID
152479-001 $32.29
2: SPRING
152513-001 $4.53
3: COVER, FUSE PLATE
150632-001 $8.78
4: BOX, CONNECTOR
115291-001 $34.33
5: DISCONTINUED
115318-001
$15.24
6: DISCONTINUED
111220-001
$4.75
7: COVER, R. POCKET
111253-001 $43.45
8: DISCONTINUED
111281-001
$53.69
9: DISCONTINUED
111372-001
$53.69
10: DISCONTINUED
111406-001
$4.75
11: COVER, L. POCKET
111410-001 $59.29
12: DISCONTINUED
84529-001
$2.71
13: DISCONTINUED
84839-001
$3.98
14: SCREW, TAP (5X12)
248428-001 $0.40
15: SCREW, TAP (5X16)
Area Code AC 248713-001 $0.40
16: WASHER, FLAT (5MM)

www.ClassicCyclesOrg

(5MM) 249237-001 $0.38

Classic Cycles Technical Resources

FAIRING STAY

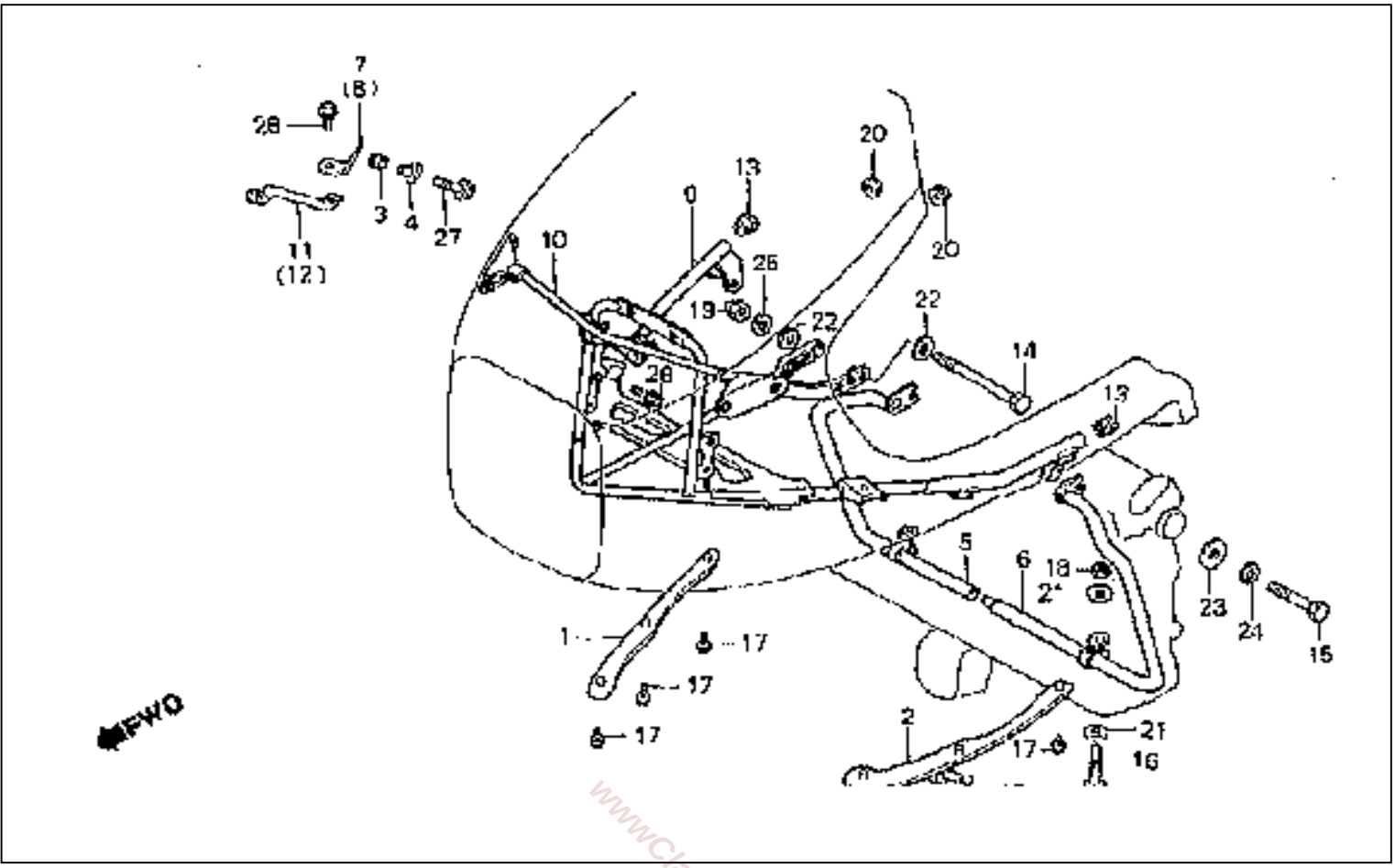

www.ClassicCyclesOrg

1: DISCONTINUED
159808-001
$58.38
2: STAY, L. FR.
159815-001 $74.18
3: RUBBER, FR.
115912-001 $2.07
4: COLLAR, SETTING
115960-001 $4.67
5: DISCONTINUED
112910-001
$65.94
6: DISCONTINUED
112941-001
$65.94
7: DISCONTINUED
111620-001
$8.36
8: DISCONTINUED
109874-001
$7.73
9: DISCONTINUED
107930-001
$197.29
10: DISCONTINUED
107950-001
$82.73
11: DISCONTINUED
108002-001
$15.84
12: DISCONTINUED
108013-001
$15.84
13: DISCONTINUED

91159-001
$4.24
14: DISCONTINUED
232770-001
$4.11
15: BOLT, HEX. (8X25)
245329-001 $0.88
16: BOLT, HEX. (8X40)
245347-001 $0.98
17: BOLT-WASHER (6X20)
246982-001 $0.75
18: NUT, HEX. (8MM)
248993-001 $0.49
19: NUT, CAP (8MM)
249142-001 $0.53
20: NUT, FLANGE (6MM)
(6MM) 2298-001 $0.62
21: WASHER, PLAIN (8MM)
249245-001 $0.29
22: WASHER, FLAT (8MM)
(8MM) 249246-001 $0.38
23: WASHER, FLAT (8MM)
Area Code A Fr_Sr_No_From MM101271 249308-001 $0.49
24: WASHER, SPRING (8MM)
(8MM) 5909-001 $0.38
25: DISCONTINUED
249350-001
$0.40
26: BOLT, FLANGE (6X14)
(6X14) 253343-001 $0.49
27: BOLT, FLANGE (6X28)
(6X28) 253374-001 $0.75

Classic Cycles Technical Resources

FAIRING WIRE HARNESS

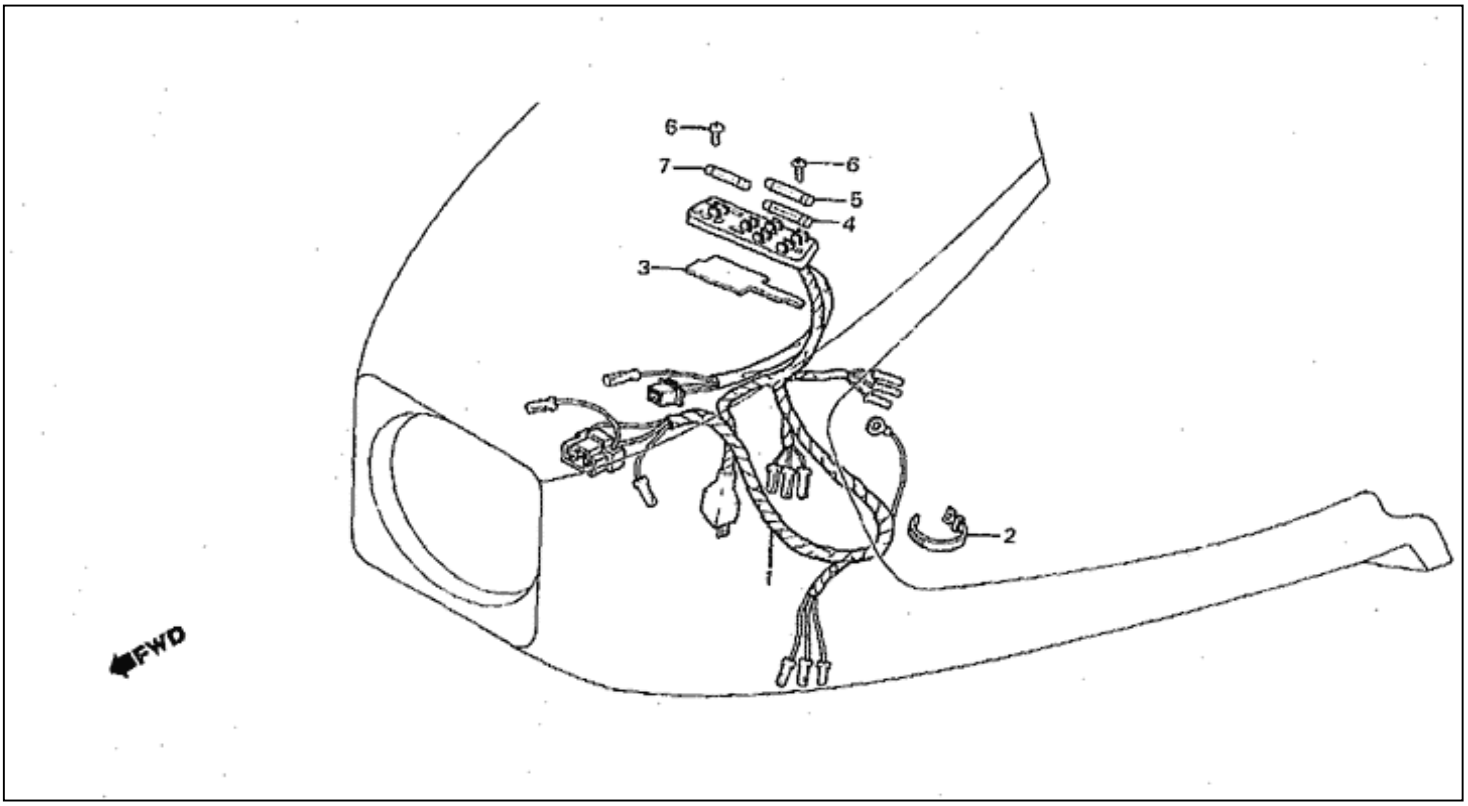

www.ClassicCyclesOrg

1: DISCONTINUED
163694-001
$27.75
2: BAND B1, CABLE
6078-001 $1.75
3: DISCONTINUED
150620-001
$2.80
4: DISCONTINUED
(2A) 150698-001
$1.24
5: FUSE (1A)
(1A) 149427-001 $0.93
6: SCREW, TAP (4X12)
248404-001 $0.40
7: FUSE B (5A)
(5A) 255293-001 $0.82

FRAME BODY

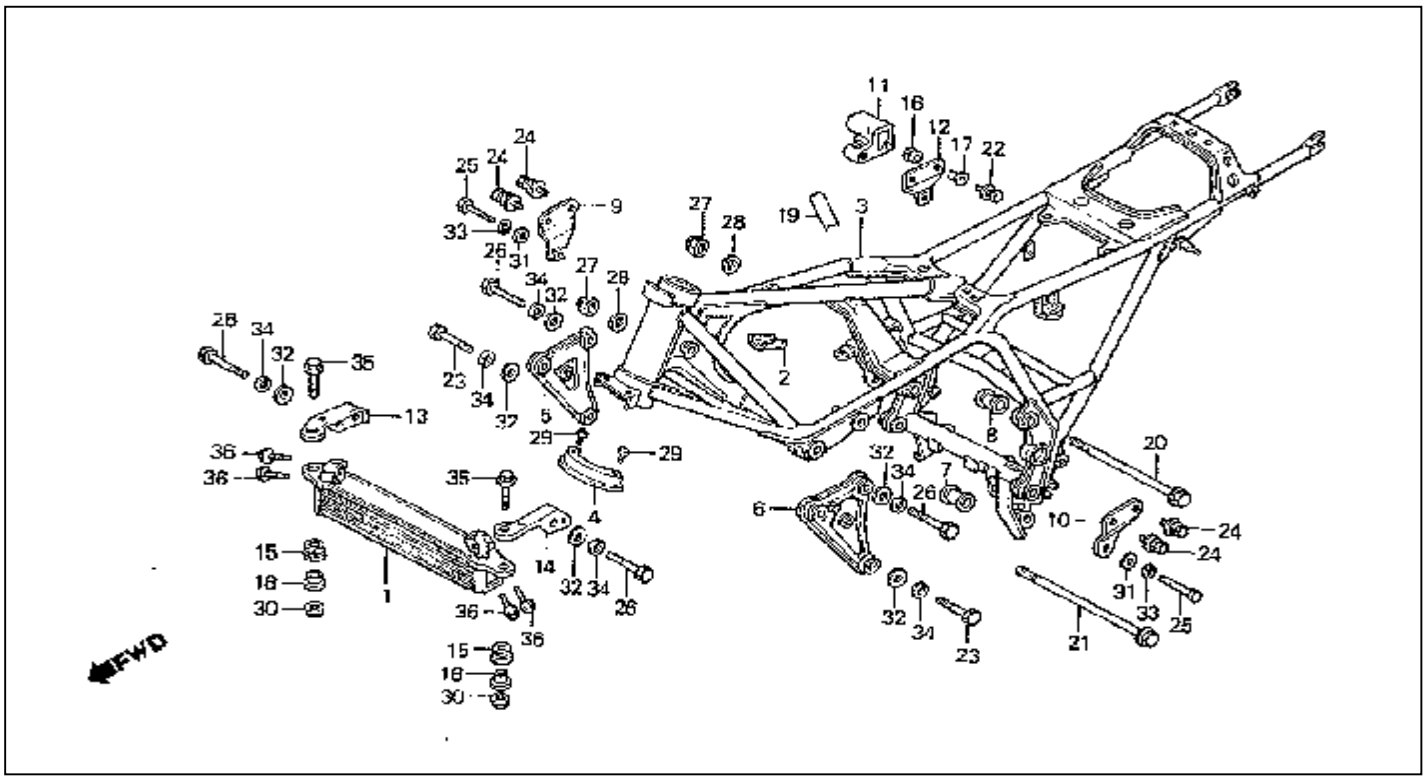

1: DISCONTINUED
(ND) 215407-001
$203.67
2: RUBBER
167095-001 $2.15
3: FRAME *NH1*
(BLACK) 133474-001 $1,503.84
4: DISCONTINUED
131967-001
$5.62
5: DISCONTINUED
130013-001
$102.56
6: DISCONTINUED
130139-001
$91.72
7: DISCONTINUED
130435-001
$7.76
8: DISCONTINUED
130476-001
$999.99
9: DISCONTINUED
130586-001
$10.64
10: DISCONTINUED
130610-001
$10.64
11: HOLDER ASSY., HELMET
(HONDALOCK) 127831-001 $39.45
12: STAY
117617-001 $16.69
13: STAY, R. OIL COOLER
118044-001 $14.42
14: STAY, L. OIL COOLER
118049-001 $14.42
15: DISCONTINUED
118054-001
$3.25
16: RUBBER, FR.

Classic Cycles Technical Resources

115912-001 $2.07
17: COLLAR, FR. FENDER
115961-001 $3.71
18: DISCONTINUED
91658-001
$3.15
19: DISCONTINUED
84556-001
$2.38
20: DISCONTINUED
80042-001
$30.22
21: DISCONTINUED
232561-001
$999.99
22: DISCONTINUED
233212-001
$2.91
23: DISCONTINUED
235326-001
$999.99
24: DISCONTINUED
235867-001
$2.05
25: DISCONTINUED
253196-001
$1.97
26: DISCONTINUED
235873-001
$999.99
27: NUT, AXLE (14MM)
(14MM) 236634-001 $4.15
28: DISCONTINUED
240083-001
$3.09
29: SCREW, PAN (4X6)
(4X6) 247119-001 $0.40
30: NUT, FLANGE (6MM)
(6MM) 2298-001 $0.62
31: WASHER, FLAT (8MM)
(8MM) 249246-001 $0.38
32: WASHER, PLAIN (10MM)
(10MM) 249248-001 $0.47
33: DISCONTINUED
249350-001
$0.40
34: WASHER (10MM)
(8MM) 249352-001 $0.52
35: BOLT, FLANGE (6X25)
(6X25) 253370-001 $0.76
36: BOLT, FLANGE (6X35)
(6X35) 254118-001 $0.88

www.ClassicCyclesOrg

FRONT BRAKE CALIPER

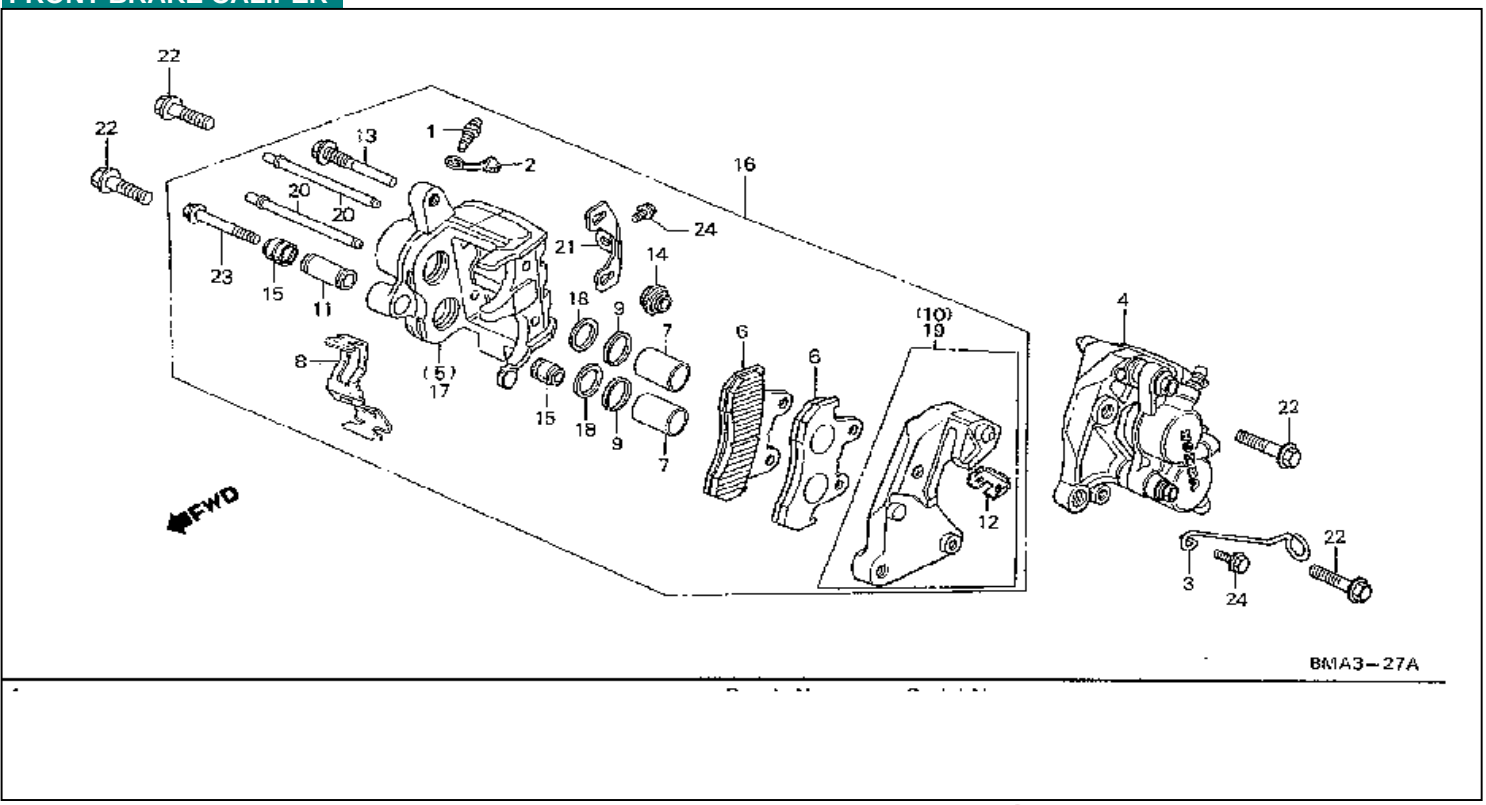

1: SCREW, BLEEDER
5862-001 $4.57
2: CAP, BLEEDER
(NOT AVAILABLE) 5923-001 $3.45
3: DISCONTINUED
Fr_Sr_No_From CM301878 138859-001
$999.99
4: CALIPER, L. FR.
139206-001 $351.75
5: CALIPER, L. FR.
139360-001 $132.33
6: DISCONTINUED
(NISSHIN ASK) 137744-001
$18.36
6: PAD, FR.
(NISSHIN JB) 137755-001 $17.50
7: PISTON
137845-001 $29.89
8: SPRING, PAD
137873-001 $4.67
9: DUST SEAL
137881-001 $4.36
10: BRACKET, L. FR.
137948-001 $108.80
11: SLEEVE
138006-001 $8.73
12: DISCONTINUED
138017-001
$7.62
13: PIN, BOLT
136920-001 $11.53
14: BOOT B
(B) 5869-001 $3.71
15: BOOT, PIN
136964-001 $2.62
16: DISCONTINUED
137377-001
$999.99
17: DISCONTINUED

Classic Cycles Technical Resources

137471-001
$116.45
18: SEAL, PISTON
137503-001 $3.67
19: DISCONTINUED
137531-001
$999.99
20: PIN, HANGER
137572-001 $8.65
21: PLATE
137587-001 $2.75
22: DISCONTINUED
81854-001
$3.09
23: BOLT, FLANGE (8X49)
(8X49) 235894-001 $3.31
24: BOLT, FLANGE (6X10)
(6X10) 253323-001 $0.63

www.ClassicCyclesOrg

FRONT BRAKE MASTER CYLINDER

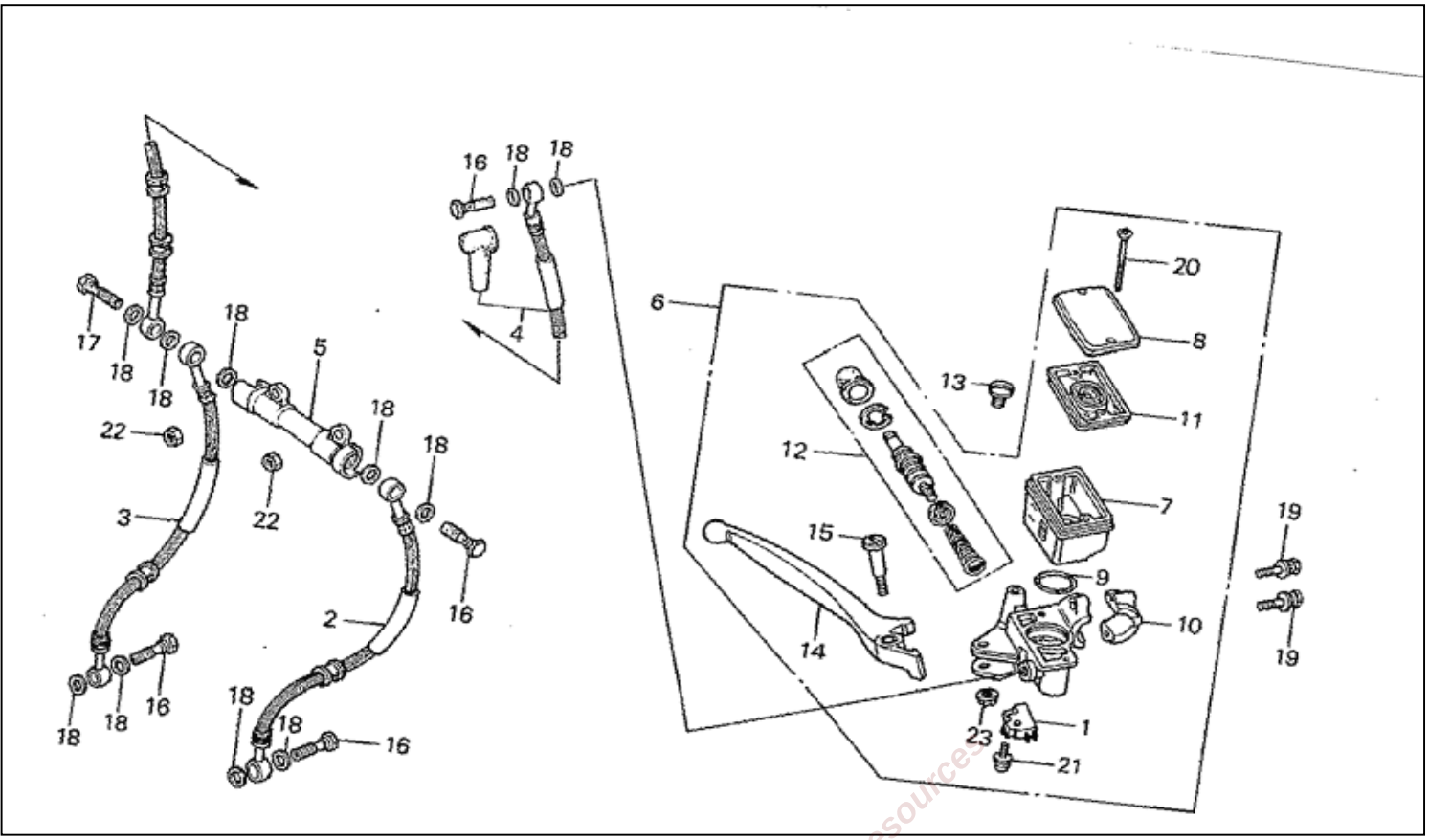

Classic Cycles Technical Resources

1: SWITCH, FR. STOP
155440-001 $16.04
2: DISCONTINUED
138194-001
$42.51
3: DISCONTINUED
138309-001
$42.51
4: DISCONTINUED
138495-001
$42.51
5: JOINT, TWO-WAY
138591-001 $49.85
6: DISCONTINUED
136745-001
$163.02
7: CUP, OIL
135167-001 $26.56
8: CAP, OIL CUP
135190-001 $30.45
9: O-RING (26.7X2.4)
135207-001 $4.16
10: HOLDER
135218-001 $19.22
11: DIAPHRAGM
135248-001 $11.93
12: MASTER CYLINDER SET
135290-001 $47.02
13: PLUG
121222-001 $1.55
14: LEVER, R. HANDLEBAR
119511-001 $21.07
15: BOLT, R.
233895-001 $6.18
16: BOLT, OIL
235267-001 $5.76

17: DISCONTINUED
235268-001
$999.99
18: WASHER, OIL BOLT (10.2X15X1.4) 2351-001 $1.98
19: BOLT-WASHER (6X25) (6X25) 246798-001 $0.75
20: SCREW, FLAT (4X45)
247526-001 $0.52
21: SCREW-WASHER (4X12)
248100-001 $0.60
22: NUT, HEX. (6MM) (6MM) 6093-001 $0.22
23: NUT, FLANGE (6MM) (6MM) 2298-001 $0.62

www.ClassicCyclesOrg

FRONT FENDER

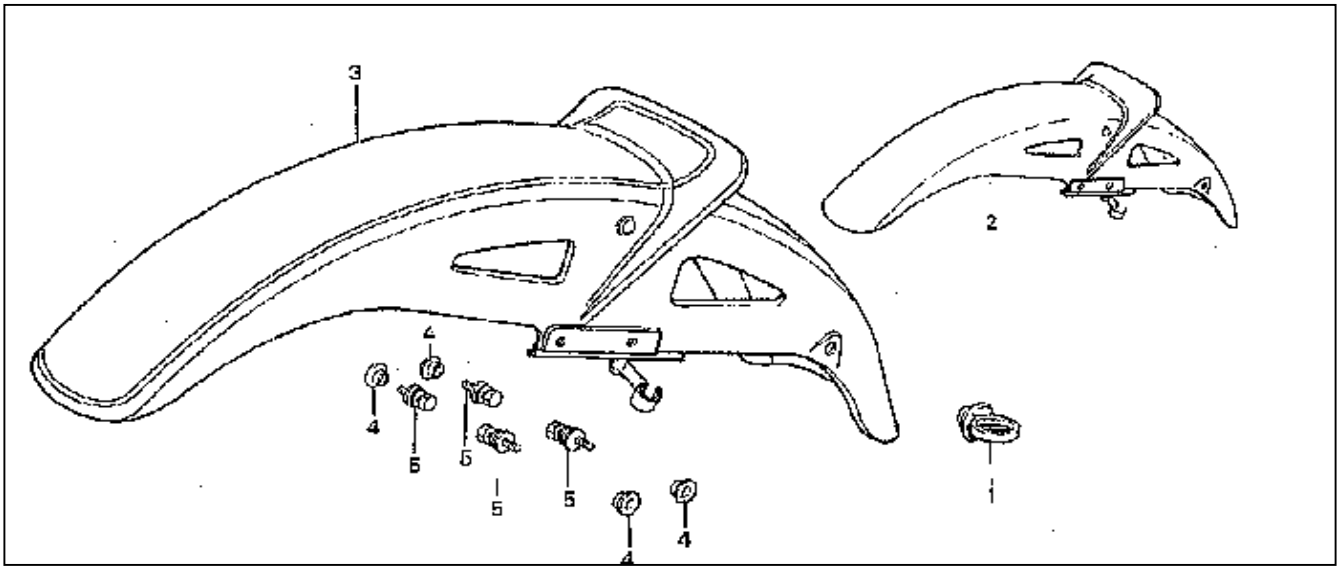

1: GROMMET, CABLE
136462-001 $2.93
3: DISCONTINUED
(MAGNUM SILVER) 116183-001
$140.91
4: WASHER, FR.
239954-001 $2.47
5: BOLT-WASHER (6X16)
(6X16) 246759-001 $0.72

Classic Cycles Technical Resources

FRONT FORK

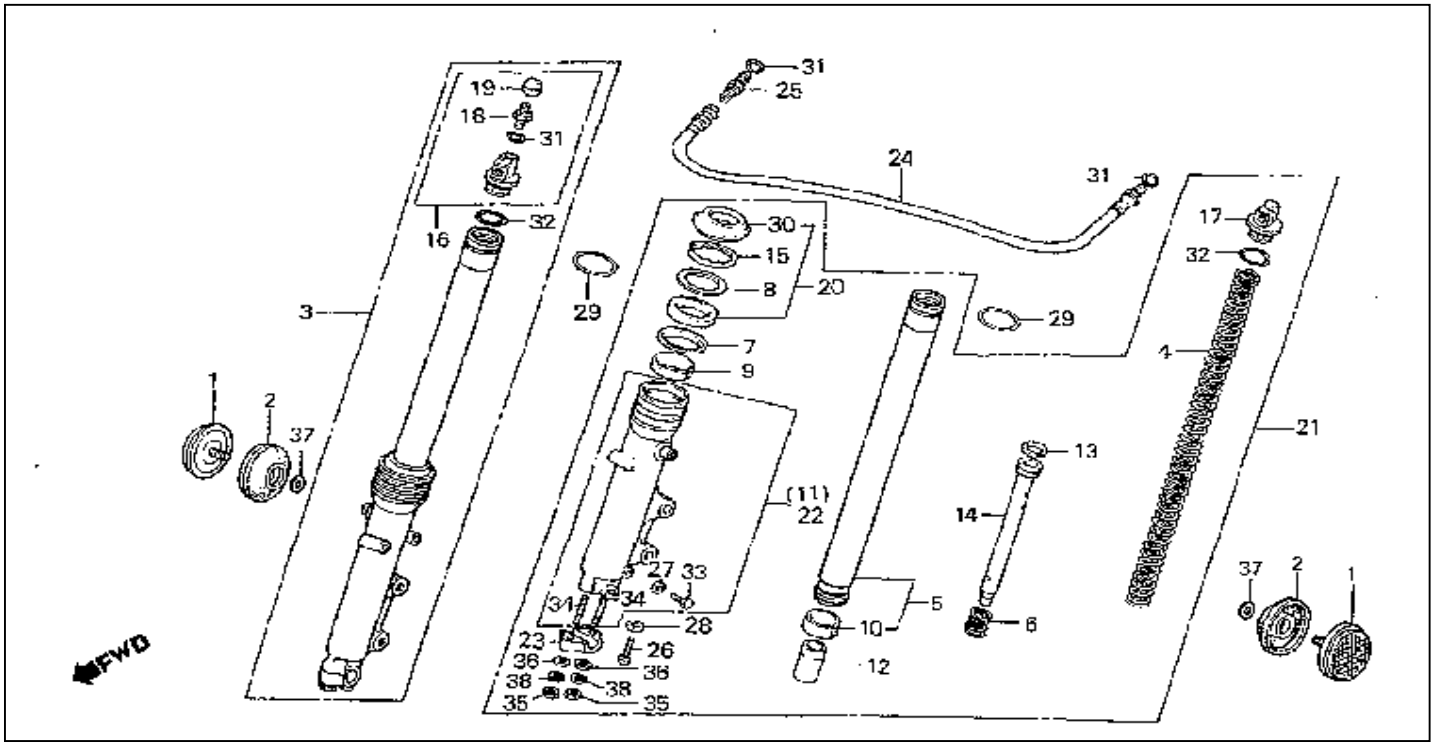

1: REFLECTOR, FR.
(STANLEY) 158176-001 $10.78
2: BASE, FR. REFLECTOR
158240-001 $6.42
3: FORK ASSY., R. FR.
125639-001 $683.55
4: SPRING, FR. FORK
124174-001 $68.05
5: DISCONTINUED
124846-001
$219.60
6: DISCONTINUED
124957-001
$4.45
7: RING, BACK-UP
122928-001 $4.80
8: PLATE, BACK-UP
122966-001 $2.24
9: BUSH, FORK PIPE
122975-001 $9.42
10: SLEEVE, FORK PIPE
123013-001 $11.13
11: DISCONTINUED
123355-001
$230.02
12: DISCONTINUED
123657-001
$15.84
13: RING,PISTON
123794-001 $6.16
14: DISCONTINUED
121947-001
$36.98
15: CIRCLIP (INNER)
122105-001 $2.80
16: DISCONTINUED
122256-001
$999.99
17: DISCONTINUED
122305-001
$44.33

www.ClassicCyclesOrg

18: VALVE, AIR
(SHOWA) 122306-001 $20.05
19: CAP ASSY., AIR VALVE
122319-001 $4.80
20: SEAL SET, FR. FORK
122558-001 $22.93
21: FORK ASSY., L. FR.
121463-001 $683.55
22: DISCONTINUED
56482-001
$230.02
23: DISCONTINUED
56156-001
$12.60
24: DISCONTINUED
120349-001
$49.13
25: CONNECTOR
120381-001 $13.40
26: BOLT, SOCKET (8X27)
(8MM) (SHOWA) 234017-001 $3.51
27: GASKET, FR.
239817-001 $1.38
28: WASHER (8MM)
(8MM) 239835-001 $1.78
29: DISCONTINUED
240150-001
$2.29
30: DUST SEAL
243341-001 $13.38
31: O-RING (5.8X1.9)
(5.8X1.9) 243937-001 $2.25
32: O-RING (29X3.5)
244375-001 $2.75
33: BOLT, HEX. (6X8)
(6X8) 245212-001 $0.55
34: BOLT, STUD (8X50)
246268-001 $0.96
35: NUT, HEX. (8MM)
(8MM) 249158-001 $0.43
36: WASHER, PLAIN (8MM)
(8MM) 249244-001 $0.35
37: WASHER, SPRING (6MM)
(6MM) 249343-001 $0.38
38: WASHER, SPRING (8MM)
(8MM) 5909-001 $0.38

Classic Cycles Technical Resources

FRONT WHEEL

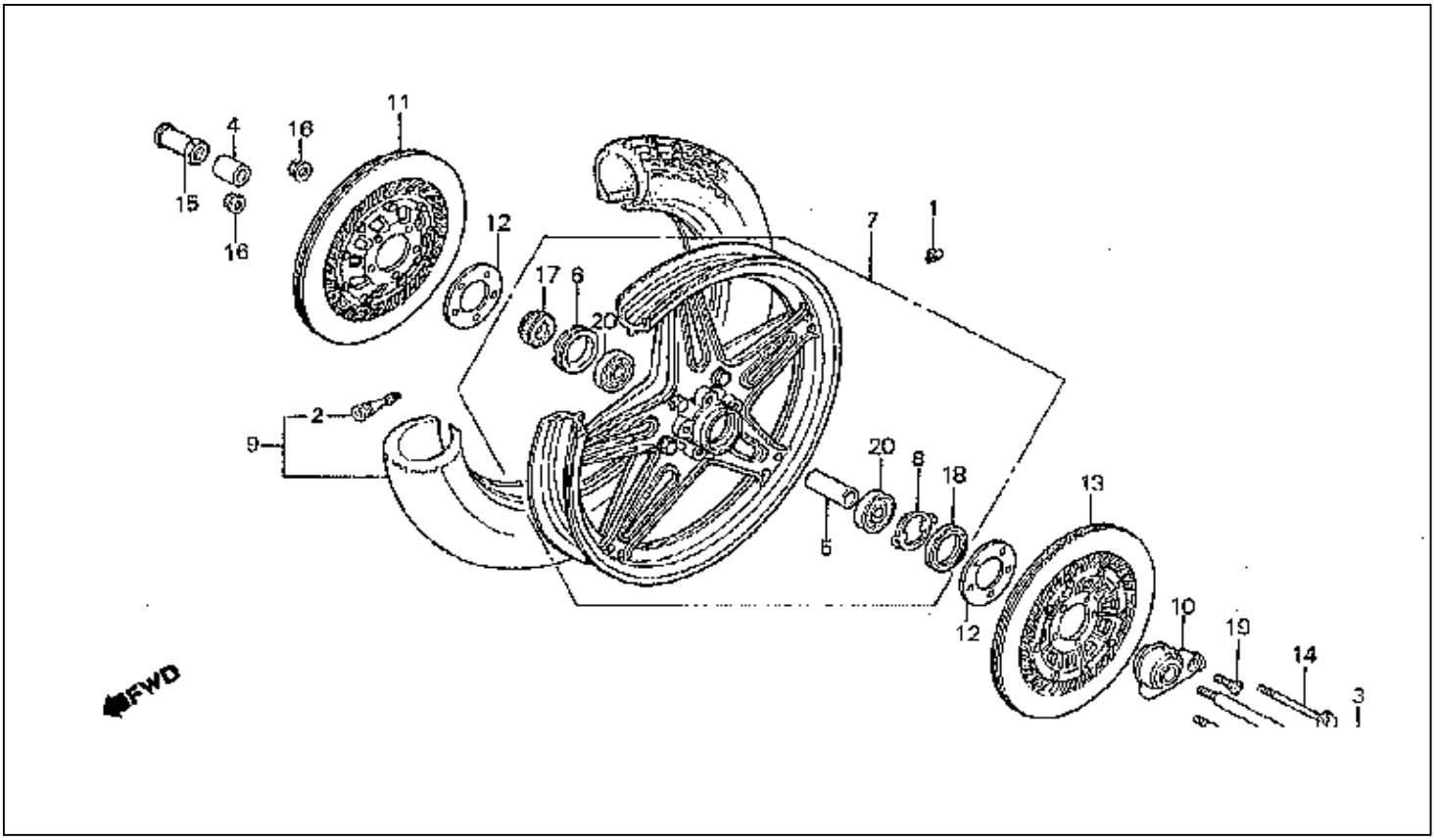

www.ClassicCyclesOrg

1: WEIGHT (20G)
(20G) 145420-001 $8.42
1: WEIGHT (30G)
(30G) 145430-001 $8.42
2: VALVE, RIM
(BS) 144494-001 $6.53
3: DISCONTINUED
142081-001
$38.96
4: COLR, FR. WHEEL SIDE
140270-001 $15.64
5: COLLAR, FR.
140763-001 $10.36
6: RETAINER, FR.
140891-001 $9.36
7: DISCONTINUED
140975-001
$303.46
8: RETAINER, GEAR BOX
141089-001 $3.91
9: DISCONTINUED
(3.50V19-4PR BS) 139584-001
$999.99
9: DISCONTINUED
(3.50V19-4PR DUNLOP) 139621-001
$999.99
10: BOX ASSY.
140032-001 $75.00
11: DISCONTINUED
138139-001
$473.25
12: SHIM, DAMPING
136826-001 $4.73
13: DISCONTINUED
137595-001
$473.25
14: DISCONTINUED

232564-001
$4.11
15: DISCONTINUED
236716-001
$999.99
16: NUT, FLANGE (8MM)
(8MM) 236819-001 $3.15
17: DUST SEAL (22X36X8)
243233-001 $6.44
18: DUST SEAL (40X50X5)
(ARAI) 243514-001 $6.47
19: SCREW, OVAL (5X20)
247719-001 $0.20
20: BEARING (6302UU)
(6302U) 254312-001 $10.31

Classic Cycles Technical Resources

FUEL TANK

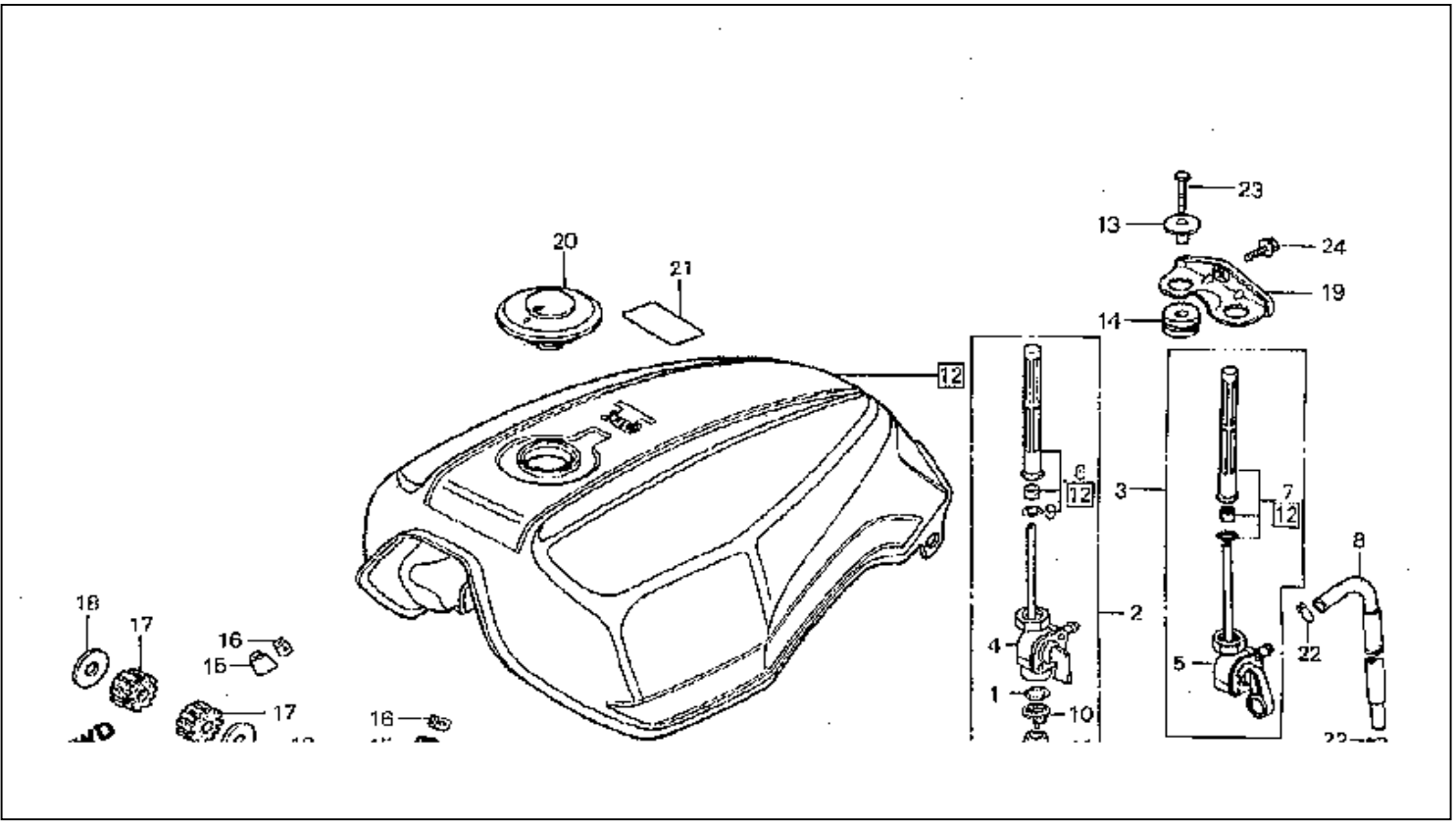

3: DISCONTINUED
227638-001
$80.73
5: DISCONTINUED
227876-001
$64.57
7: FILTER SET, FUEL
227946-001 $37.60
8: DISCONTINUED
228159-001
$9.02
12: DISCONTINUED
(MAGNUM SILVER) 73052-001
$714.28
13: DISCONTINUED
75148-001
$4.55
14: DISCONTINUED
75017-001
$3.71
15: MLDG, FR. FUEL TANK
72863-001 $5.42
16: CLIP B
72937-001 $1.76
17: DISCONTINUED
77615-001
$4.76
18: DISCONTINUED
77635-001
$1.60
19: DISCONTINUED
77497-001
$17.96
20: CAP, FUEL FILLER
76988-001 $55.76
21: LABEL *NH1* (TYPEW)
(WHITE) 85412-001 $3.25
22: CLIP, TUBE (B12)

www.ClassicCyclesOrg

(B12) 250436-001 $0.71
23: BOLT, FLANGE (6X25)
(6X25) 253235-001 $0.68
24: BOLT, FLANGE (8X16)
(8X16) 253471-001 $0.75

Classic Cycles Technical Resources

GENERATOR

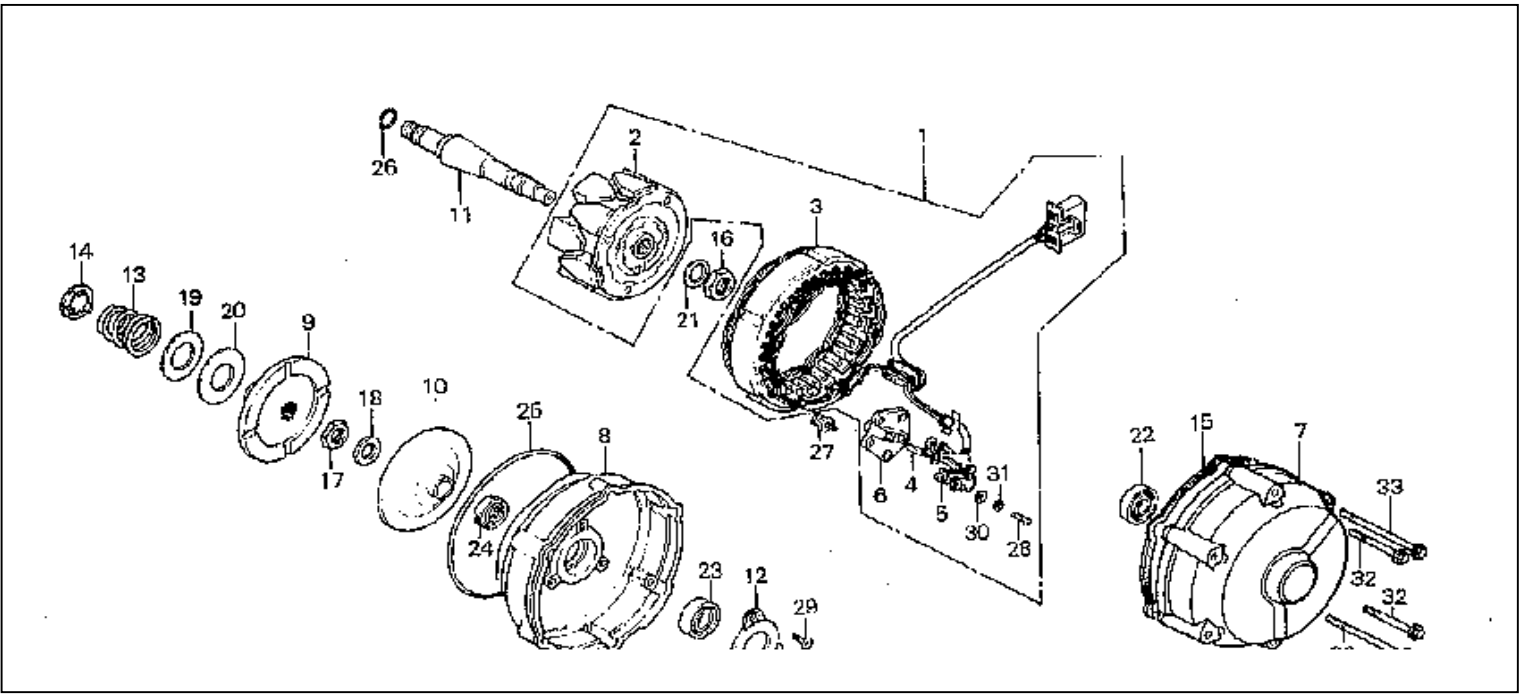

1: DISCONTINUED
(HITACHI) 170466-001
$999.99
2: DISCONTINUED
(HITACHI) 171011-001
$334.42
3: STATOR
(HITACHI) 169620-001 $379.09
4: BRUSH A
170022-001 $23.53
5: BRUSH B
170028-001 $26.71
6: BASE, BRUSH
170030-001 $21.33
7: DISCONTINUED
170169-001
$183.73
8: DISCONTINUED
170177-001
$184.92
9: PLATE A
170178-001 $78.36
10: PLATE B
170191-001 $69.15
11: SHAFT, ALTERNATOR
170195-001 $70.51
12: PLATE
170209-001 $12.07
13: SPRING
170217-001 $10.22
14: DISCONTINUED
170220-001
$4.95
15: GASKET
170222-001 $6.31
16: DISCONTINUED
236020-001
$2.11
17: DISCONTINUED
236264-001
$6.88
18: DISCONTINUED

www.ClassicCyclesOrg

237664-001
$3.71
19: DISCONTINUED
238349-001
$3.01
20: DISCONTINUED
238521-001
$8.16
21: DISCONTINUED
239774-001
$0.61
22: DISCONTINUED
(KOYO) 241758-001
$999.99
23: BEARING (6203)
241803-001 $40.75
24: OIL SEAL (22X35X7)
(ARAI) 243148-001 $4.15
25: GASKET
243783-001 $5.42
26: O-RING (12.5X2.2)
243855-001 $2.93
27: BOLT-WASHER (6X16)
(6X16) 246759-001 $0.72
27: BOLT-WASHER (6X16)
246951-001 $0.62
28: SCREW, PAN (4X12)
(4X12) 247144-001 $0.40
29: SCREW, FLAT (6X16)
(6X16) 247590-001 $0.43
30: WASHER, PLAIN (4MM)
(4MM) 249233-001 $0.38
31: WASHER, SPRING (4MM)
(4MM) 249337-001 $0.38
32: BOLT, FLANGE (6X65)
254083-001 $1.62
33: DISCONTINUED
254087-001
$1.70

Classic Cycles Technical Resources

HEADLIGHT

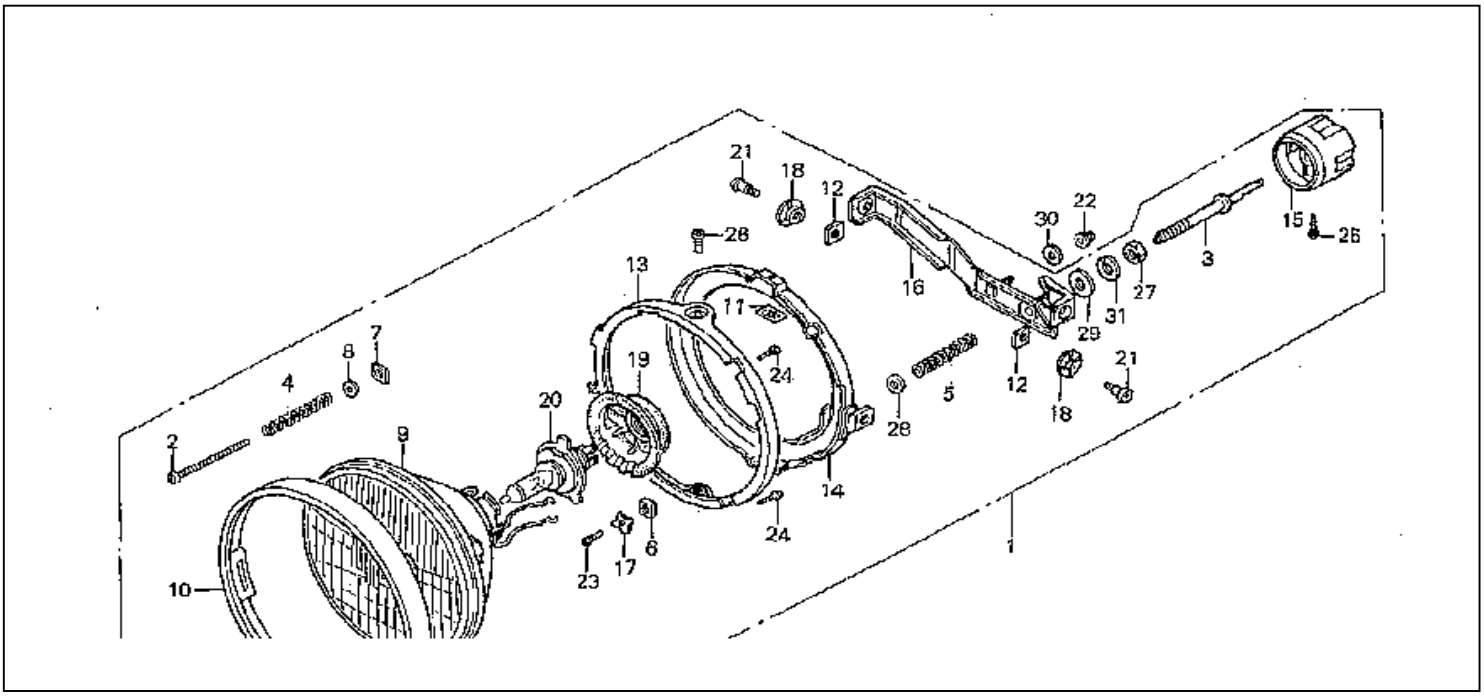

1: HEADLIGHT ASSY.
161807-001 $221.24
2: SCREW
162009-001 $3.51
3: DISCONTINUED
162012-001
$999.99
4: SPRING
162081-001 $1.96
5: DISCONTINUED
162086-001
$999.99
6: DISCONTINUED
162195-001
$2.91
7: NUT, BEAM ADJ.
162203-001 $1.38
8: WASHER
162208-001 $1.65
9: HEADLIGHT UNIT
162243-001 $39.33
10: DISCONTINUED
160412-001
$999.99
11: NUT, UNIT HOLDER
160490-001 $1.78
12: NUT, UNIT HOLDER
160491-001 $2.24
13: DISCONTINUED
160617-001
$999.99
14: DISCONTINUED
160636-001
$33.35
15: DISCONTINUED
160645-001
$999.99
16: BRACKET, HEADLIGHT
160648-001 $35.29
17: WASHER, SPRING
160655-001 $1.49
18: WASHER, HEADLIGHT

www.ClassicCyclesOrg

160668-001 $4.67
19: COVER, RUBBER
160682-001 $12.07
20: BULB (12V60/55W)
(12V60/55W) (H4) (HALOGEN) (STANLEY) 158550-001 $6.60
21: DISCONTINUED
235334-001
$1.20
22: NUT, OPEN STAY (6MM)
(6MM) 236360-001 $3.23
23: SCREW, PAN (3X8)
(3X8) 247061-001 $0.20
24: SCREW, PAN (3X12)
(3X12) 247073-001 $0.40
25: SCREW, PAN (3X14)
247080-001 $0.29
26: SCREW, PAN (5X8)
(5X8) 247224-001 $0.40
27: NUT, HEX. (12MM)
249070-001 $0.58
28: WASHER, PLAIN (6MM)
(6MM) 249243-001 $0.22
29: WASHER, PLAIN (12MM)
249255-001 $0.45
30: WASHER, PLAIN (6MM)
(6MM) 249305-001 $0.31
31: WASHER (12MM)
249358-001 $0.38

Classic Cycles Technical Resources

LEFT COVER

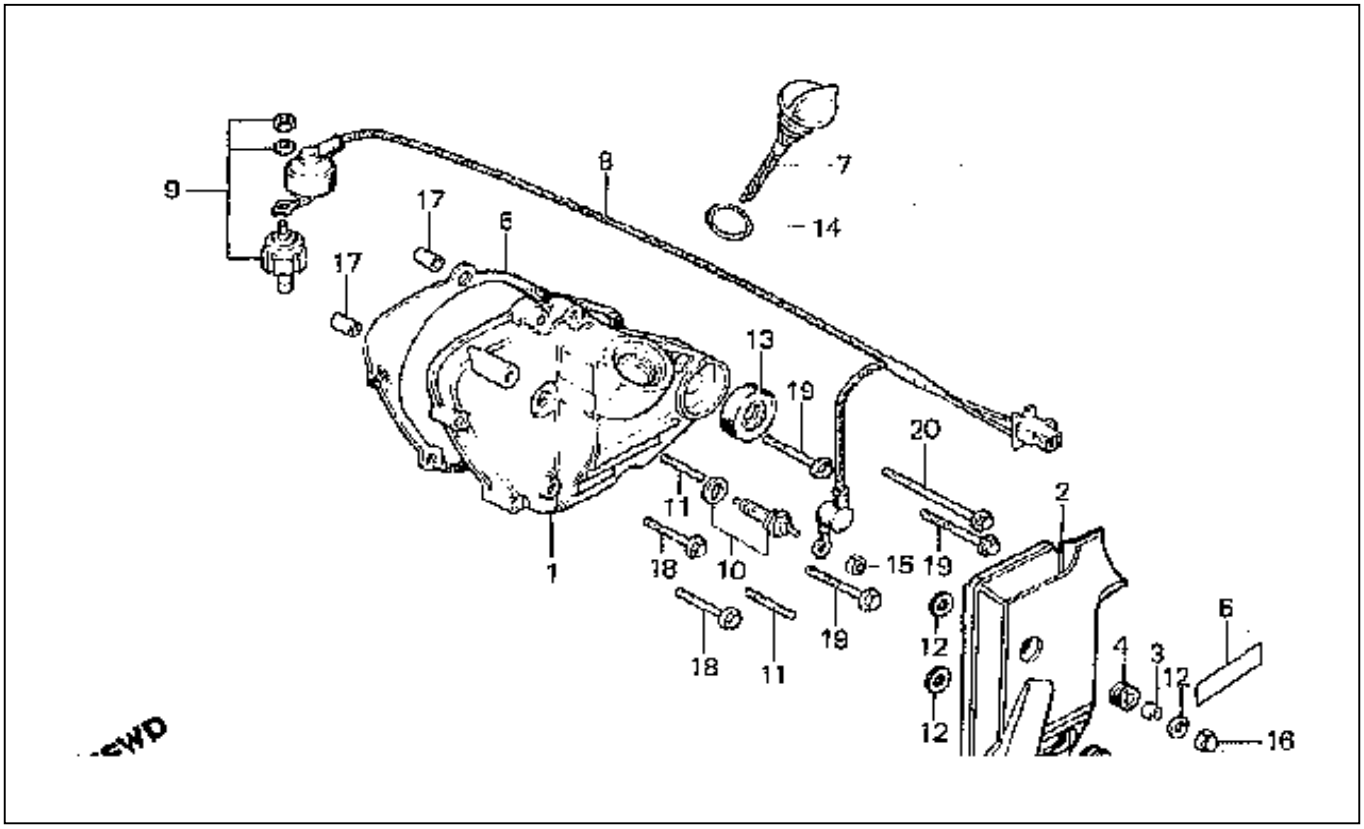

1: DISCONTINUED
198758-001
$999.99
2: DISCONTINUED
198875-001
$18.76
3: COLLAR
198872-001 $6.91
4: GROMMET
198877-001 $1.51
5: DISCONTINUED
198878-001
$3.76
6: GASKET, L.
199606-001 $2.80
7: DISCONTINUED
215695-001
$7.53
8: DISCONTINUED
163634-001
$999.99
9: SWITCH, OIL PRESSURE
(DENSO) 152698-001 $24.33
10: SWITCH, NEUTRAL
155832-001 $12.38
11: DISCONTINUED
80714-001
$1.31
12: WASHER, HOSE COVER
237832-001 $1.38
13: OIL SEAL (17X28X7)
(17X28X7) (ARAI) 243013-001 $2.47
14: O-RING (22X3.0)
(22X3.0) 244009-001 $1.30
15: NUT, HEX. (4MM)
(4MM) 248969-001 $0.42
16: NUT, CAP (6MM)
(6MM) 249134-001 $0.83

www.ClassicCyclesOrg

17: PIN, DOWEL (8X14)
(8X14) 2267-001 $0.92
18: BOLT, FLANGE (6X28)
(6X28) 254110-001 $1.24
19: BOLT, FLANGE (6X35)
254078-001 $0.88
20: BOLT, FLANGE (6X55)
254082-001 $1.28

Classic Cycles Technical Resources

METER

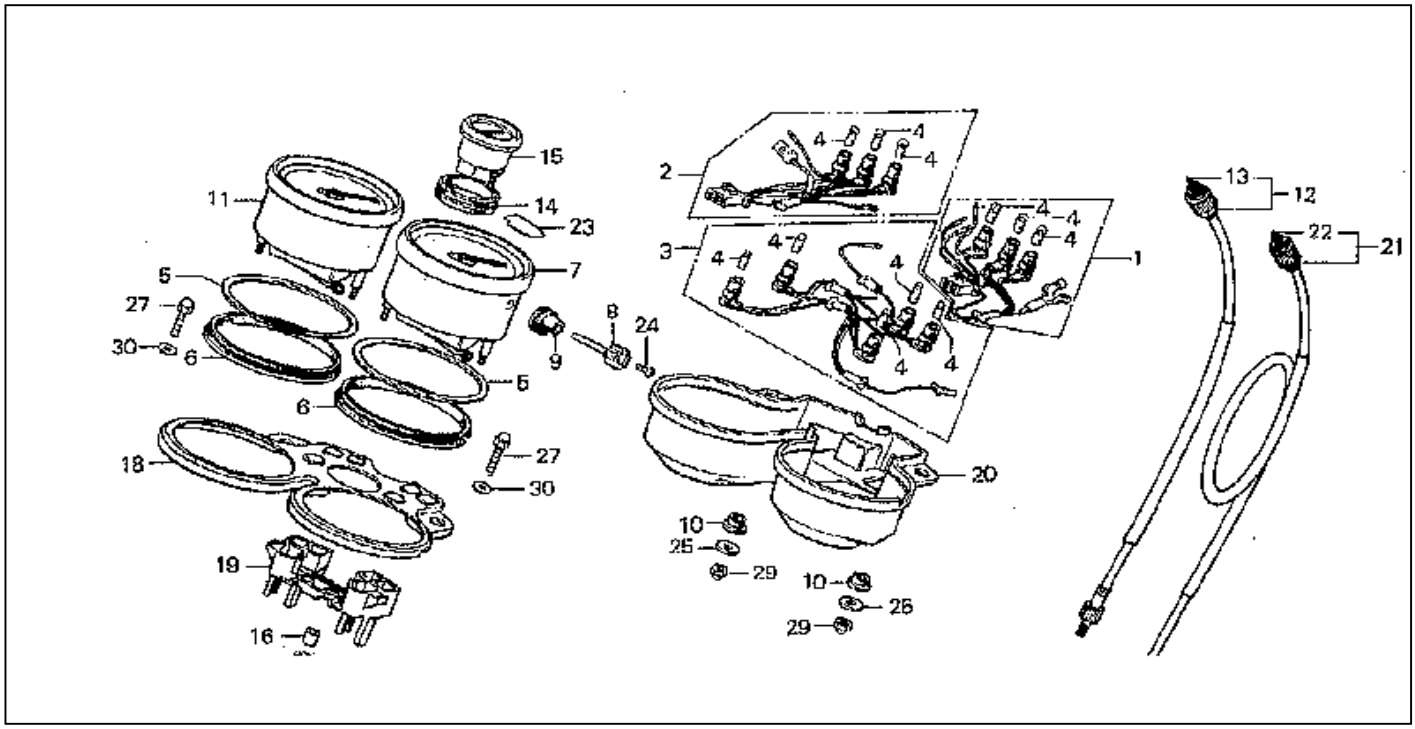

1: DISCONTINUED
163798-001
$36.98
2: DISCONTINUED
163822-001
$999.99
3: DISCONTINUED
163864-001
$38.53
4: BULB, DASH (12V3.4W)
(12V3.4W) (IMASEN) 158560-001 $1.27
5: DISCONTINUED
153312-001
$14.73
6: DISCONTINUED
153317-001
$9.60
7: DISCONTINUED
(MPH 85) 153746-001
$999.99
8: KNOB, TRIP METER
152480-001 $9.22
9: GROMMET, TRIP KNOB
152504-001 $2.15
10: DISCONTINUED
152755-001
$3.56
11: DISCONTINUED
152865-001
$999.99
12: CABLE, TACHOMETER
138633-001 $12.62
13: DISCONTINUED
153039-001
$999.99
14: DISCONTINUED
151277-001
$8.91
15: DISCONTINUED
151280-001

www.ClassicCyclesOrg

$95.64
16: DISCONTINUED
151282-001
$0.69
17: DISCONTINUED
151283-001
$1.75
18: DISCONTINUED
151709-001
$82.71
19: BOX, PILOT
151736-001 $27.24
20: DISCONTINUED
151813-001
$70.78
21: CABLE, SPEEDOMETER
138685-001 $15.01
22: DISCONTINUED
138754-001
$999.99
23: DISCONTINUED
84823-001
$1.78
24: SCREW, PAN (2X6)
80045-001 $1.49
25: DISCONTINUED
239246-001
$0.69
26: DISCONTINUED
239947-001
$1.64
27: DISCONTINUED
246078-001
$1.48
28: NUT, HEX. (4MM)
(4MM) 248969-001 $0.42
29: NUT, CAP (5MM)
249131-001 $0.53
30: WASHER, PLAIN (8MM)
(8MM) 249272-001 $0.38

Classic Cycles Technical Resources

OIL FILTER OIL PUMP

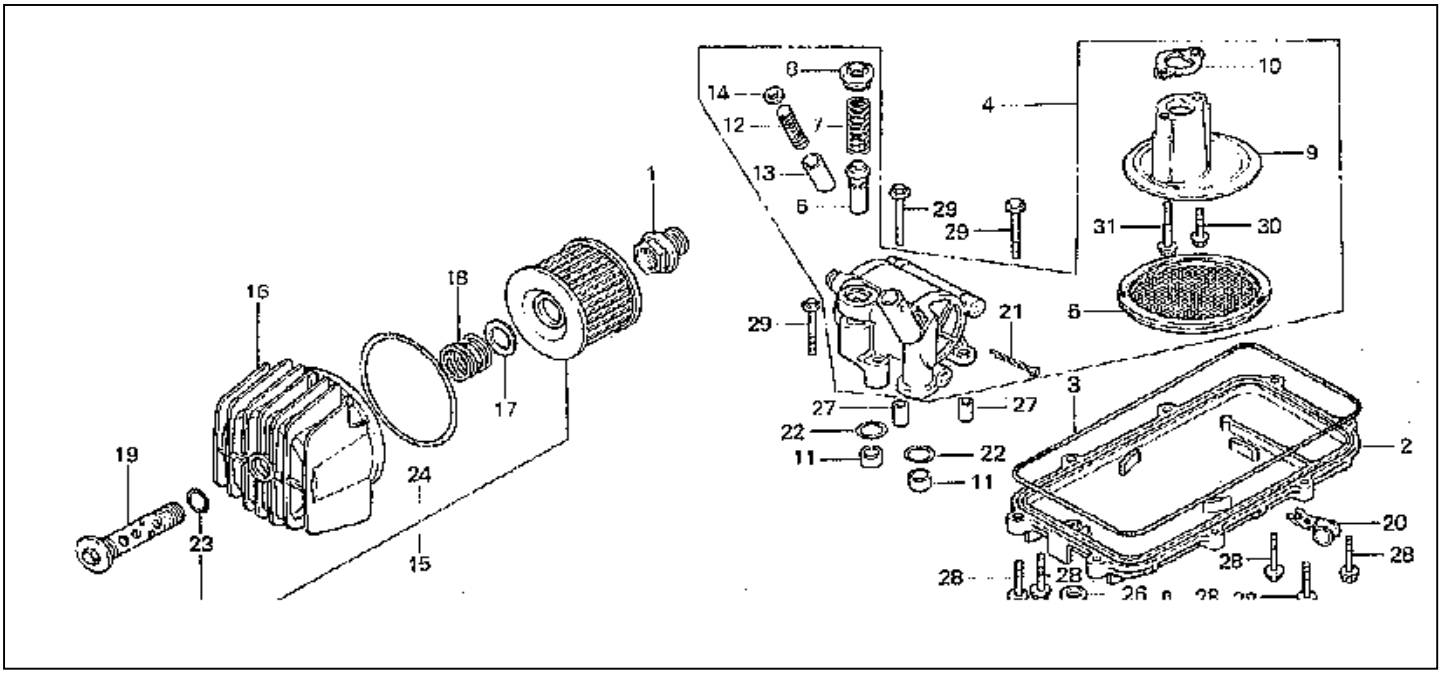

1: DISCONTINUED
197603-001
$16.56
2: DISCONTINUED
197642-001
$123.98
3: GASKET, OIL PAN
198006-001 $11.82
4: DISCONTINUED
213694-001
$220.65
5: SCREEN
214111-001 $15.96
6: DISCONTINUED
214300-001
$11.93
7: DISCONTINUED
214301-001
$2.82
8: DISCONTINUED
214306-001
$5.45
9: DISCONTINUED
214325-001
$42.25
10: DISCONTINUED
214355-001
$999.99
11: COLLAR, O-RING
214402-001 $2.33
12: DISCONTINUED
214419-001
$3.15
13: VALVE, RELIEF
214554-001 $12.18
14: SEAT, RELIEF VALVE
214574-001 $2.09
15: ELEMENT, OIL FILTER
214807-001 $7.98
16: DISCONTINUED
214838-001
$73.09

www.ClassicCyclesOrg

17: SEAT
214851-001 $2.65
18: SPRING
214854-001 $3.00
19: BOLT
214864-001 $41.44
20: DISCONTINUED
225460-001
$2.67
21: DISCONTINUED
240766-001
$2.05
22: O-RING,15X2.5
243767-001 $1.09
23: O-RING (15X2.5)
(15X2.5) 243781-001 $3.65
24: O-RING (89X4.5)
244148-001 $2.75
24: O-RING (89X4.5)
244149-001 $2.75
25: BOLT, DRAIN (12MM)
(12MM) 246210-001 $1.55
26: WASHER, DRAIN (12MM)
(12MM) 2266-001 $0.42
27: PIN, DOWEL (8X14)
(8X14) 2267-001 $0.92
28: BOLT, FLANGE (6X25)
(6X25) 253235-001 $0.68
29: BOLT, FLANGE (6X32)
(6X32) 253387-001 $0.68
30: BOLT, FLANGE (6X18)
(6X18) 2334-001 $0.75
31: BOLT, FLANGE (6X35)
(6X35) 254116-001 $0.91

Classic Cycles Technical Resources

PRIMARY SHAFT

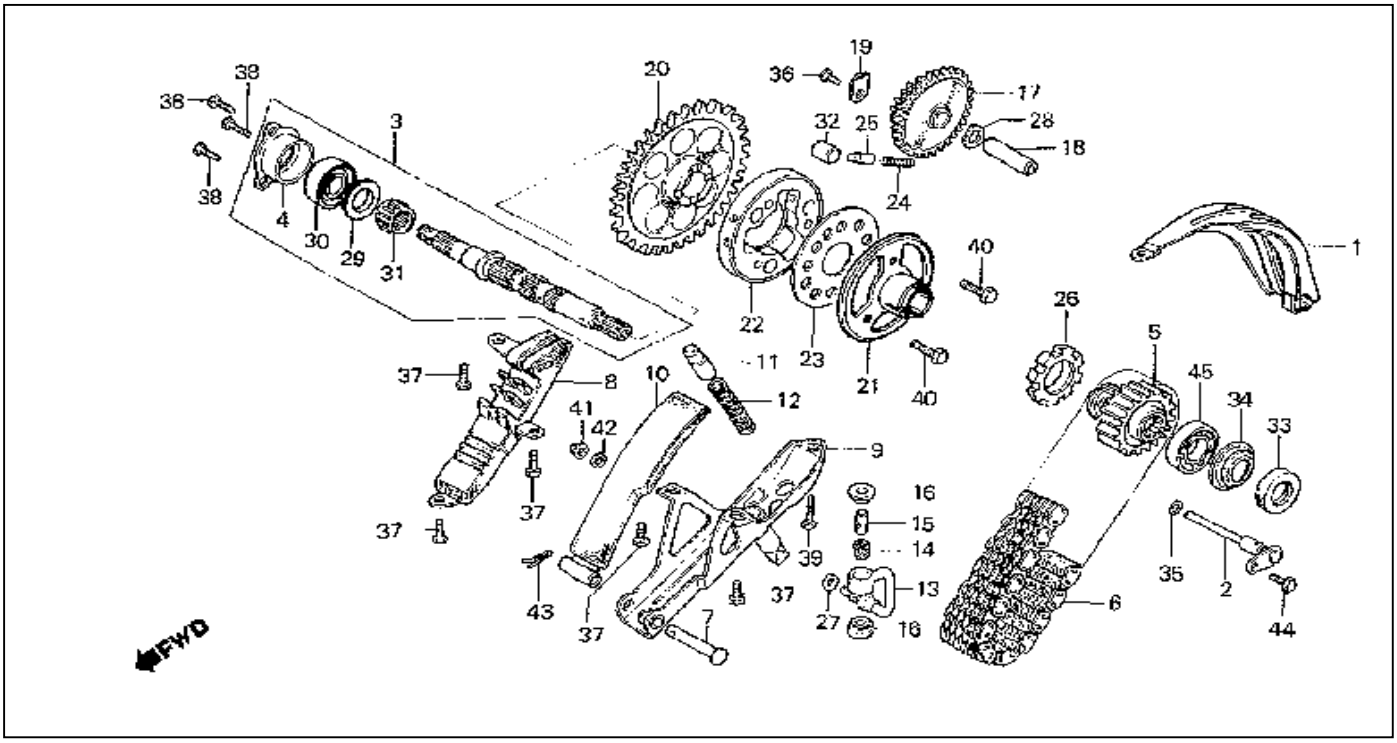

1: DISCONTINUED
197076-001
$14.15
2: DISCONTINUED
215124-001
$28.89
3: SHAFT, PRIMARY
59180-001 $194.33
4: HOLDER
59146-001 $74.67
5: SPROCKET (23T)
(23T) 59523-001 $142.56
6: DISCONTINUED
61001-001
$180.38
7: DISCONTINUED
61093-001
$1.69
8: DISCONTINUED
61095-001
$90.91
9: DISCONTINUED
61108-001
$999.99
10: DISCONTINUED
61080-001
$65.20
11: DISCONTINUED
61072-001
$25.69
12: DISCONTINUED
61071-001
$3.25
13: DISCONTINUED
60927-001
$25.00
14: DISCONTINUED
60923-001
$9.29
15: DISCONTINUED
60926-001

www.ClassicCyclesOrg

$4.55
16: DISCONTINUED
60947-001
$3.40
17: DISCONTINUED
175710-001
$999.99
18: DISCONTINUED
175763-001
$9.25
19: DISCONTINUED
175773-001
$1.60
20: DISCONTINUED
(64T) 175854-001
$148.58
21: DISCONTINUED
175881-001
$999.99
22: DISCONTINUED
175941-001
$145.24
23: DISCONTINUED
176004-001
$8.04
24: SPRING
176014-001 $2.04
25: CAP
176049-001 $11.49
26: DISCONTINUED
79363-001
$14.11
27: WASHER
Fr_Sr_No_To 2000156 237590-001 $2.44
28: WASHER, WAVE (10MM)
(10MM) 237793-001 $2.24
29: DISCONTINUED
239964-001
$6.53
30: BEARING (5205A)
(5205A) 241644-001 $42.25
31: DISCONTINUED
242130-001
$27.91
32: ROLLER (15X16)
242499-001 $8.75
33: DISCONTINUED
242681-001
$999.99
34: DISCONTINUED
243086-001
$5.55
35: O-RING (7X1.7)
(7X1.7) 244108-001 $1.55
36: BOLT, HEX. (6X12)
(6X12) 245596-001 $0.48
37: BOLT, HEX. (6X16)
(6X16) 245226-001 $0.55
38: BOLT, HEX. (6X18)
(6X18) 245233-001 $0.55
39: BOLT, HEX. (6X20)
(6X20) 245613-001 $0.55
40: BOLT, HEX. (8X18)
245319-001 $0.65
41: NUT, FLANGE (6MM)
(6MM) 2298-001 $0.62
42: WASHER, PLAIN (6MM)

Classic Cycles Technical Resources

(6MM) 249243-001 $0.22
43: PIN, LOCK (8MM)
(8MM) 249418-001 $0.53
44: BOLT, FLANGE (6X14)
(6X14) 2269-001 $0.75
45: BEARING (6205)
(6205) 254191-001 $12.82

www.ClassicCycles.org

REAR BRAKE MASTER CYLINDER

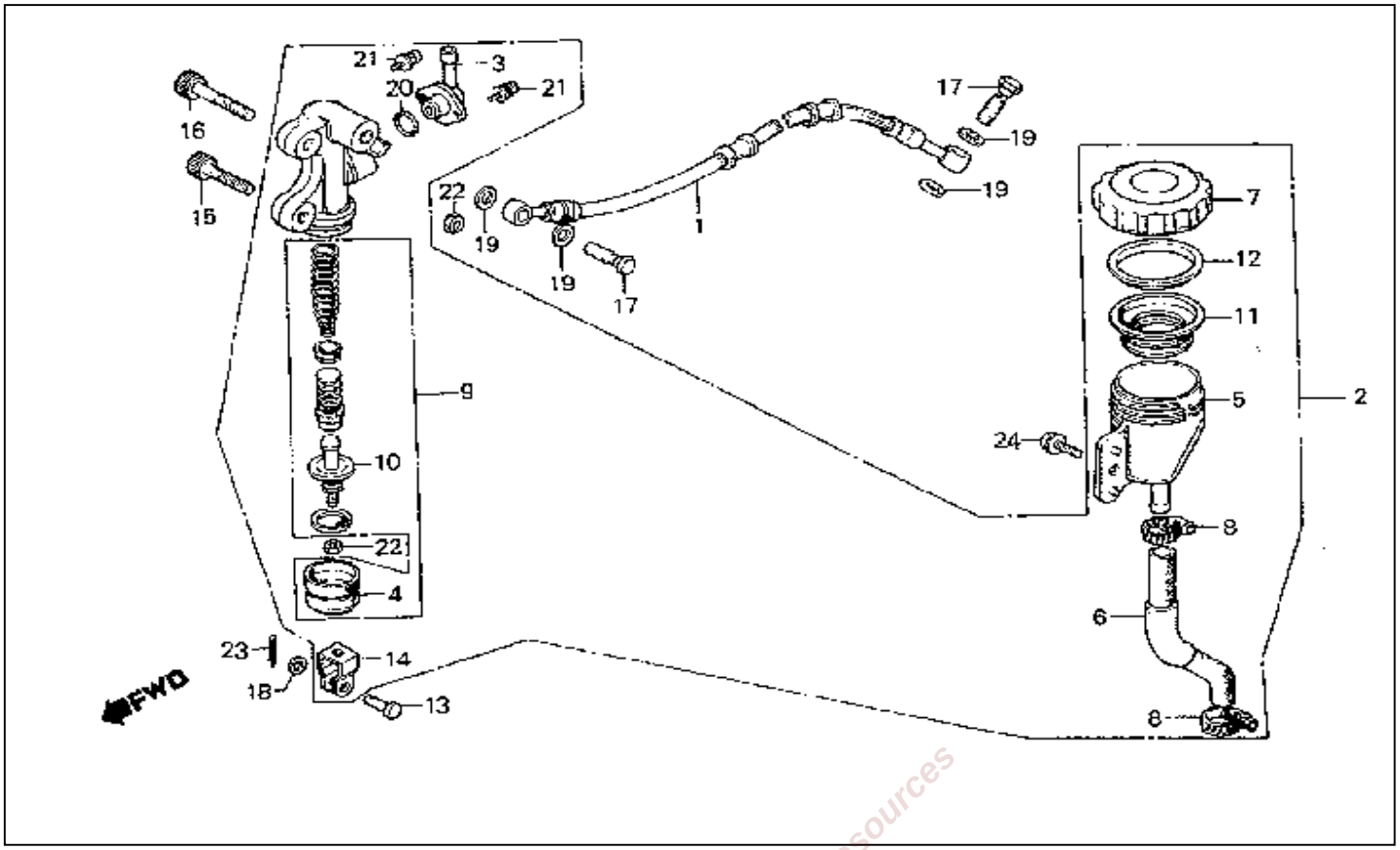

Classic Cycles Technical Resources

1: DISCONTINUED
142427-001
$42.65
2: DISCONTINUED
141592-001
$236.51
3: CONNECTOR
141638-001 $7.04
4: BOOT
141653-001 $5.67
5: CUP
141707-001 $26.56
6: HOSE
141726-001 $6.95
7: CAP, OIL CUP
141794-001 $21.07
8: CLAMP
141797-001 $9.53
9: MASTER CYLINDER SET
141816-001 $46.76
10: DISCONTINUED
141840-001
$14.78
11: DIAPHRAGM
135242-001 $5.91
12: PLATE, DIAPHRAGM
(NOT AVAILABLE) 135254-001 $2.75
13: PIN, BRAKE ROD
135723-001 $2.85
14: DISCONTINUED
135732-001
$9.18
15: BOLT, SOCKET (8X28)
232951-001 $3.38
16: BOLT, SPECIAL SOCKET
233025-001 $7.45

17: BOLT, OIL
235267-001 $5.76
18: WASHER (7X12)
238732-001 $1.05
19: WASHER, OIL BOLT (10.2X15X1.4) 2351-001 $1.98
20: O-RING (14.8X2.4) (14.8X2.4) 243115-001 $1.58
21: SCREW-WASHER (4X12)
248098-001 $0.60
22: NUT, HEX. (8MM) (8MM) 249050-001 $0.53
23: PIN, COTTER (1.6X25) (1.6X15) 249376-001 $0.45
24: BOLT, FLANGE (6X12) (6X12) 253337-001 $0.73

www.ClassicCyclesOrg

REAR CUSHION

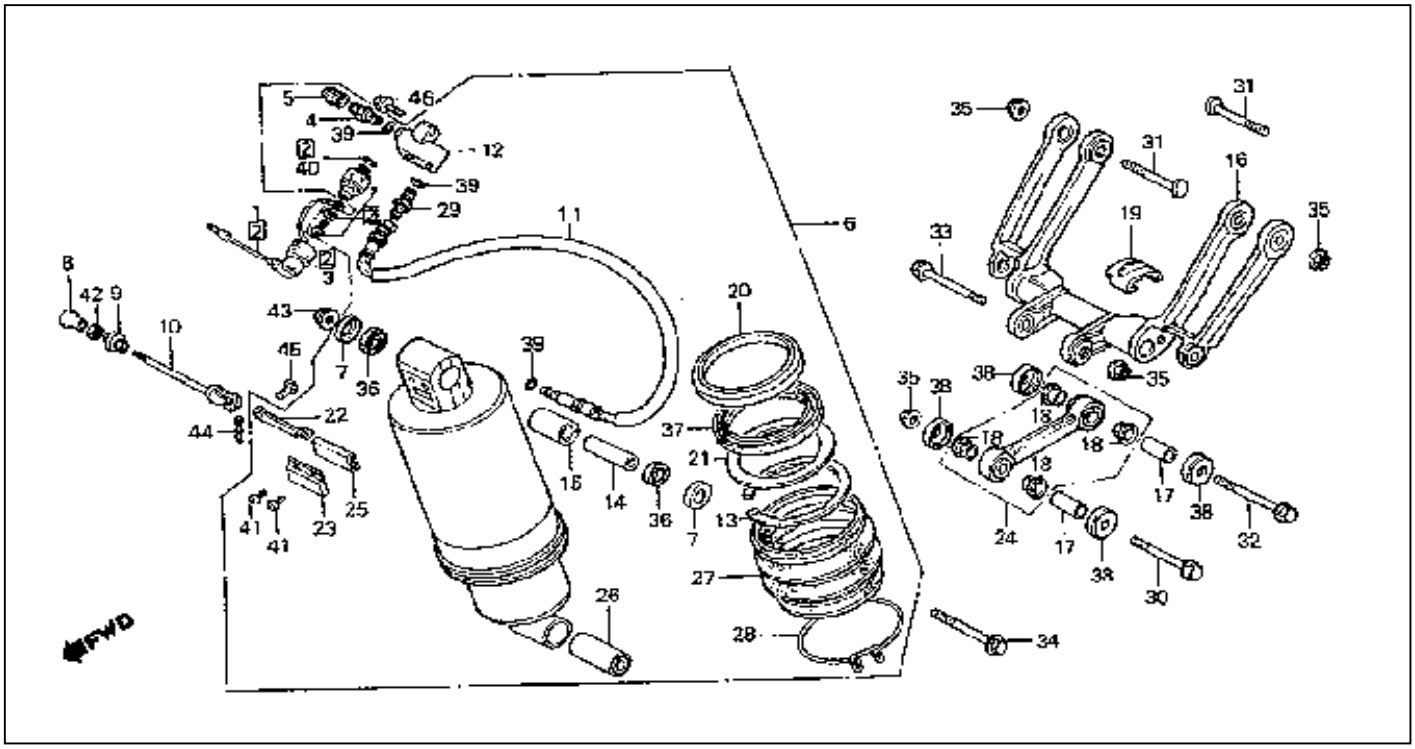

1: DISCONTINUED
163921-001
$9.85
2: SENSOR SET, AIR
155790-001 $79.62
3: DISCONTINUED
155795-001
$999.99
4: VALVE, AIR
(SHOWA) 122306-001 $20.05
5: CAP ASSY., AIR VALVE
122319-001 $4.80
6: DISCONTINUED
57718-001
$818.74
8: BUTTON
53484-001 $11.13
9: DISCONTINUED
53486-001
$5.84
10: ROD
53384-001 $16.78
11: DISCONTINUED
52673-001
$45.71
12: DISCONTINUED
52644-001
$41.42
13: DISCONTINUED
52841-001
$7.65
14: COLLAR, BUSH
52235-001 $7.98
15: DISCONTINUED
52245-001
$15.44
16: ARM, CUSHION
52487-001 $741.82
17: COLLAR
52565-001 $14.33
18: BUSH, CONNECTING ROD

Classic Cycles Technical Resources

52426-001 $14.25
19: SLIDER, CHAIN
52444-001 $13.40
20: DISCONTINUED
54135-001
$30.32
21: RING, BACK-UP
(SHOWA) 54239-001 $5.67
22: LEVER, ADJUSTING
54041-001 $16.18
23: HOLDER, ADJUSTER
54059-001 $4.80
24: DISCONTINUED
54015-001
$999.99
25: GUIDE, ADJUSTER
54037-001 $7.66
26: DISCONTINUED
54077-001
$15.44
27: DISCONTINUED
55784-001
$38.73
28: BAND, BOOT
55748-001 $4.80
29: CONNECTOR
120381-001 $13.40
30: BOLT (10X58)
(10X58) 235459-001 $4.42
31: DISCONTINUED
235947-001
$999.99
32: BOLT, FLANGE (10X65)
79881-001 $3.87
33: DISCONTINUED
235961-001
$8.98
34: DISCONTINUED
235965-001
$8.04
35: NUT, AXLE (10MM)
(10MM) 236579-001 $2.09
36: OIL SEAL (14X22X5)
243373-001 $2.58
37: OIL SEAL
243507-001 $19.11
38: SEAL, RR.
243586-001 $7.27
39: O-RING (5.8X1.9)
(5.8X1.9) 243937-001 $2.25
40: O-RING (7.7X2.3)
(7.7X2.3) (ARAI) 243741-001 $1.28
41: SCREW, PAN (4X6)
(4X6) 247117-001 $0.40
42: NUT, HEX. (6MM)
(6MM) 249042-001 $0.53
43: NUT, HEX. (10MM)
249062-001 $0.62
44: PIN, SPLIT (1.6X12)
(1.6X12) 249374-001 $0.37
45: PIN B
253115-001 $1.44
46: BOLT, FLANGE (6X12)
(6X12) 253337-001 $0.73

wwwClassicCyclesOrg

REAR FENDER

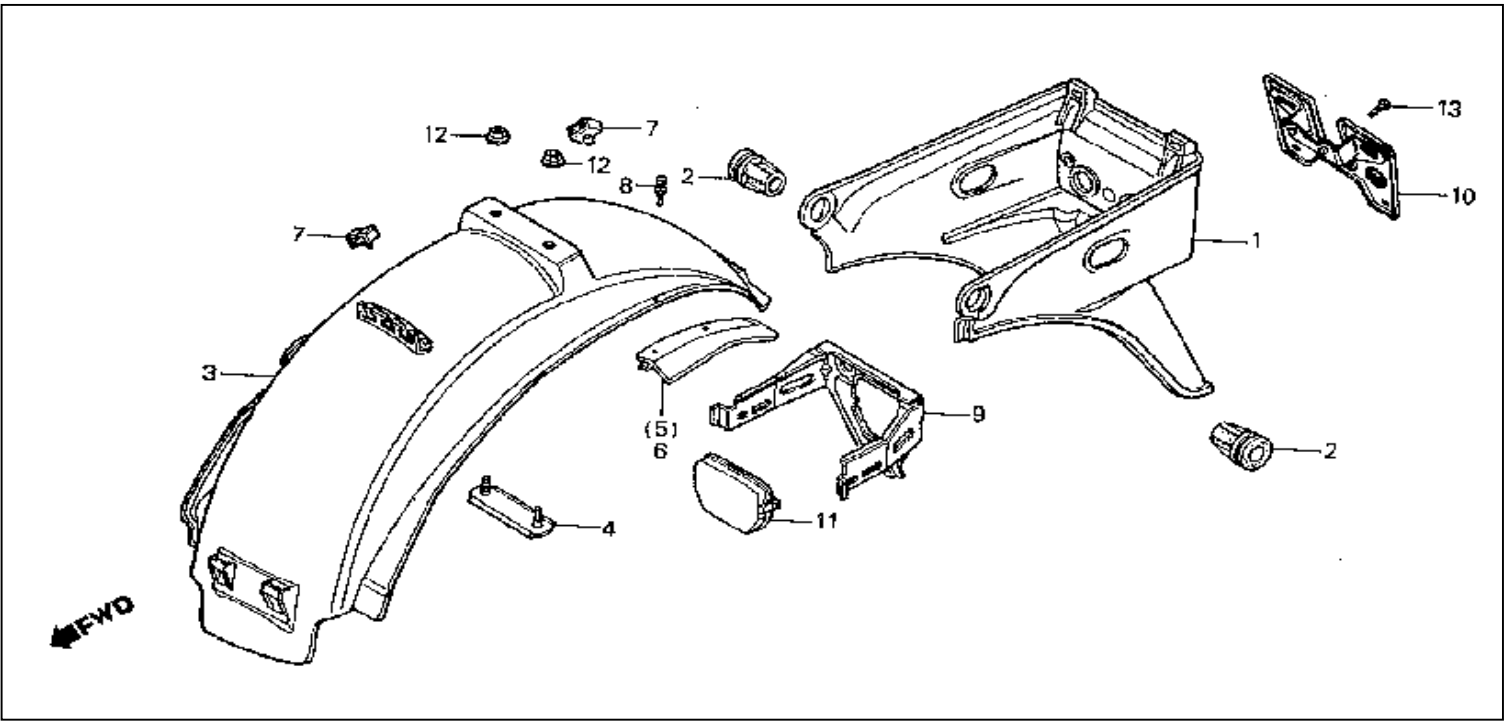

1: DISCONTINUED
(MAGNUM SILVER) 101431-001
$126.10
2: DISCONTINUED
100019-001
$5.18
3: FENDER B, RR.
100090-001 $119.42
4: PLATE, RR.
100244-001 $17.55
5: DISCONTINUED
100270-001
$8.49
6: DISCONTINUED
100298-001
$8.49
7: CLAMP, CABLE
100306-001 $0.78
8: PLUG
100580-001 $1.58
9: BRACKET, TAILLIGHT
91359-001 $97.67
10: DISCONTINUED
91456-001
$27.55
11: DISCONTINUED
91595-001
$8.42
12: NUT, FLANGE (6MM)
(6MM) 2298-001 $0.62
13: BOLT, FLANGE (6X16)
(6X16) 253349-001 $0.49

Classic Cycles Technical Resources

REAR FORK CHAIN CASE

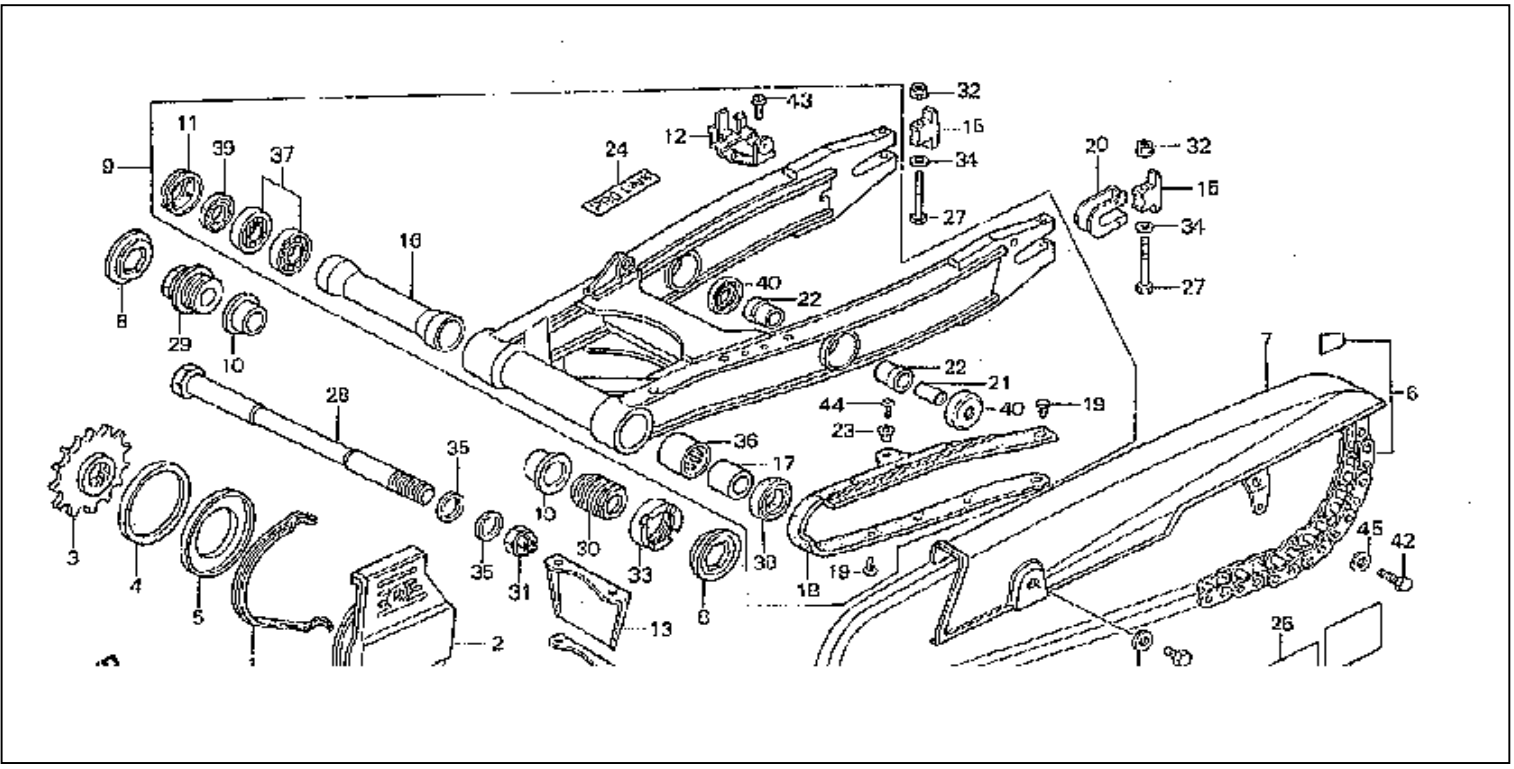

1: DISCONTINUED
198837-001
$13.22
2: DISCONTINUED
198951-001
$103.64
3: DISCONTINUED
(18T) 51814-001
$61.34
4: RING, DAMPER
51103-001 $19.22
5: GUIDE, DAMPER RING
51096-001 $18.00
6: DISCONTINUED
(108L TAKASAGO) 147580-001
$999.99
7: DISCONTINUED
148576-001
$119.31
8: DISCONTINUED
130348-001
$4.24
9: SWINGARM ASSY., RR.
55481-001 $598.27
10: DISCONTINUED
56889-001
$13.29
11: DISCONTINUED
56965-001
$18.18
12: DISCONTINUED
55080-001
$12.69
13: DISCONTINUED
55161-001
$7.73
14: DISCONTINUED
55175-001
$3.38

www.ClassicCyclesOrg

15: DISCONTINUED
57019-001
$15.84
16: DISCONTINUED
55033-001
$47.78
17: DISCONTINUED
58508-001
$17.84
18: DISCONTINUED
58748-001
$999.99
19: DISCONTINUED
58626-001
$999.99
20: DISCONTINUED
58605-001
$24.84
21: COLLAR
52532-001 $13.89
22: DISCONTINUED
52423-001
$15.44
23: COLLAR, FAIRING STAY
112304-001 $1.58
24: DISCONTINUED
85580-001
$3.56
25: DISCONTINUED
85974-001
$3.57
26: MARK
84290-001 $5.47
27: DISCONTINUED
79912-001
$2.52
28: DISCONTINUED
234394-001
$39.98
29: DISCONTINUED
234596-001
$17.25
30: DISCONTINUED
234632-001
$12.55
31: NUT, AXLE (16MM)
(16MM) 236679-001 $4.67
32: NUT, FLANGE (8MM)
(8MM) 236819-001 $3.15
33: NUT, RR.
237110-001 $11.49
34: WASHER (8MM)
239224-001 $0.78
35: WASHER, PLAIN (16MM)
(16MM) 239978-001 $3.51
36: DISCONTINUED
(KOYO) 242039-001
$999.99
37: DISCONTINUED
242042-001
$131.93
38: DISCONTINUED
243125-001
$5.05
39: DISCONTINUED
243134-001
$3.67

Classic Cycles Technical Resources

40: SEAL, RR.
243586-001 $7.27
41: DISCONTINUED
245216-001
$999.99
42: BOLT, HEX. (6X16)
(6X16) 245606-001 $0.75
43: SCREW, PAN (5X8)
(5X8) 247221-001 $0.38
44: SCREW-WASHER (5X10)
(5X10) 247868-001 $0.52
45: WASHER, PLAIN (6MM)
(6MM) 249303-001 $0.45

www.ClassicCycles.org

REAR WHEEL

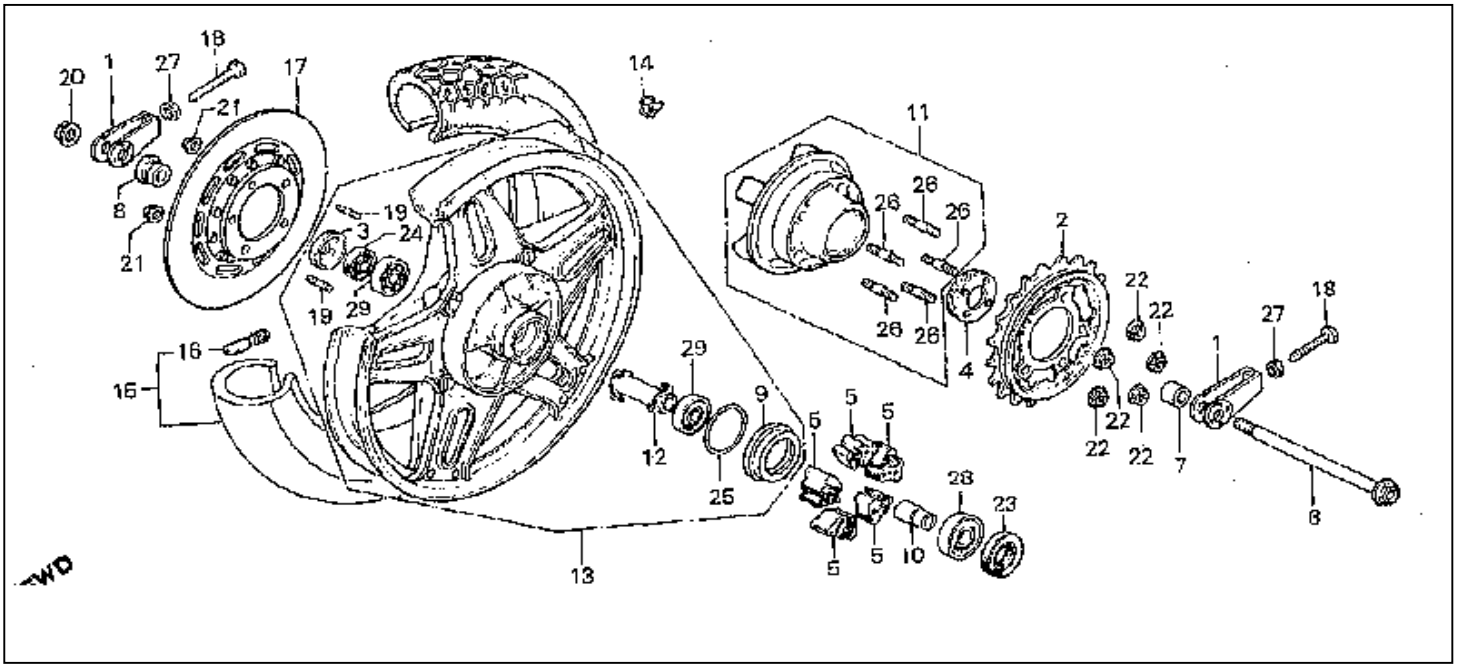

1: DISCONTINUED
149219-001
$16.00
2: SPROCKET (42T)
(42T) 148050-001 $124.17
3: RETAINER, RR.
146522-001 $17.31
4: DISCONTINUED
146528-001
$25.78
5: DAMPER, RR. WHEEL
146565-001 $16.04
6: DISCONTINUED
147452-001
$48.97
7: DISCONTINUED
145693-001
$999.99
8: COLLAR, RR.
145846-001 $21.44
9: SLEEVE, RR.
146246-001 $6.02
10: SLEEVE, RR. AXLE
146250-001 $15.47
11: FLANGE, FINAL DRIVEN
146342-001 $218.00
12: DISCONTINUED
144692-001
$18.85
13: DISCONTINUED
144991-001
$999.99
14: WEIGHT (20G)
(20G) 145420-001 $8.42
14: WEIGHT (30G)
(30G) 145430-001 $8.42
15: DISCONTINUED
(130/90V-18 BS) 143936-001
$999.99
15: DISCONTINUED
(130/90V-18 DUNLOP) 143937-001
$999.99
16: VALVE, RIM

Classic Cycles Technical Resources

(BS) 144494-001 $6.53
17: DISK, RR. BRAKE
143708-001 $296.15
18: BOLT, CHAIN ADJ.
234246-001 $6.18
19: BOLT, STUD (8X45)
234681-001 $3.31
20: NUT, U (18MM)
236680-001 $7.76
21: NUT, HEX. (8MM)
(8MM) 236816-001 $1.93
22: NUT, FLANGE (12MM)
(12MM) 236817-001 $5.64
23: OIL SEAL (34X55X9)
241090-001 $9.56
24: DUST SEAL
243293-001 $4.16
25: O-RING (66X3.6)
243515-001 $3.84
26: BOLT, STUD (12X55)
246204-001 $1.29
27: NUT, HEX. (10MM)
(10MM) 248998-001 $0.62
28: BEARING (6305U)
254288-001 $15.18
29: BEARING (6304UU)
254314-001 $12.85

www.ClassicCyclesOrg

RIGHT COVER ADVANCER

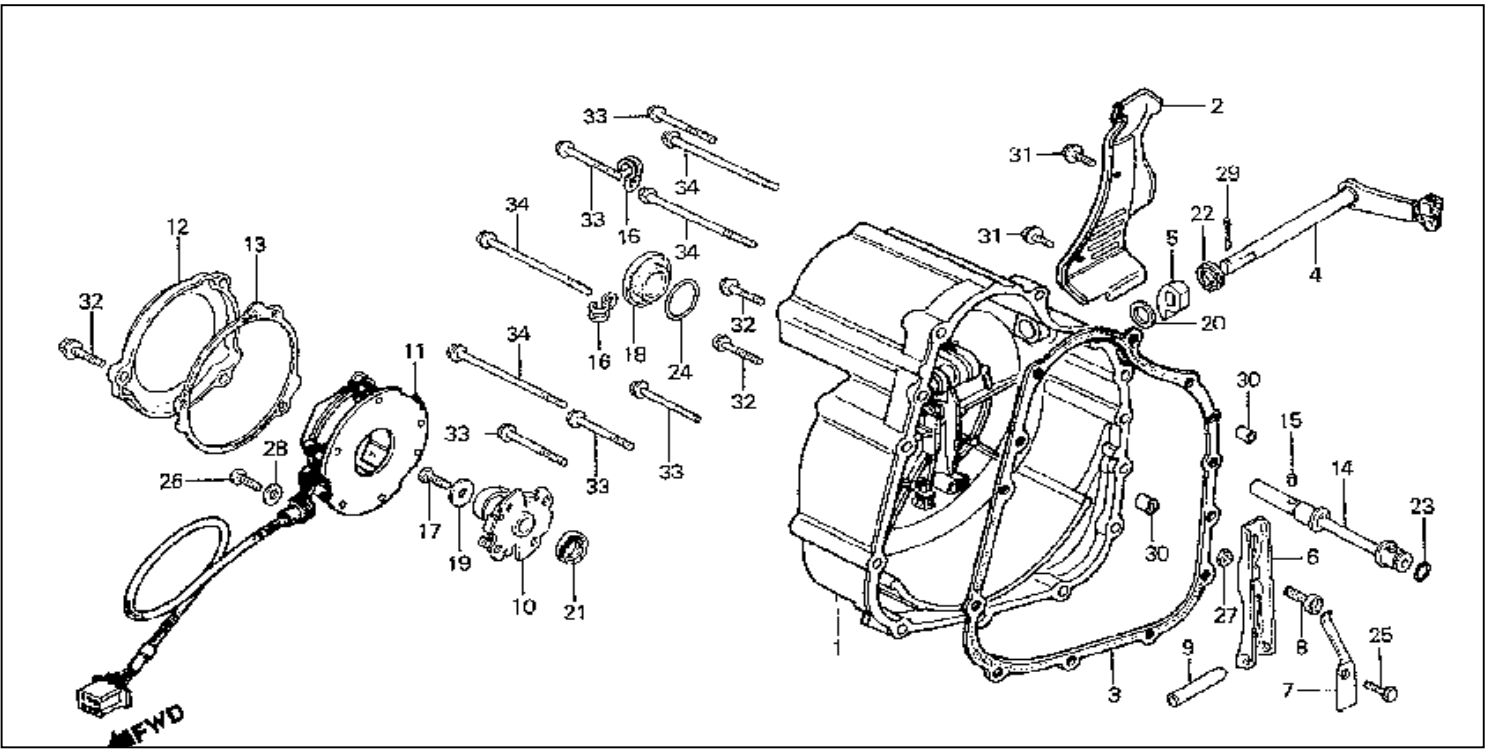

Classic Cycles Technical Resources

1: DISCONTINUED
198237-001
$999.99
2: DISCONTINUED
198463-001
$21.05
3: GASKET, R.
199521-001 $6.59
4: DISCONTINUED
59040-001
$44.36
5: CAM, CLUTCH LIFTER
60304-001 $4.58
6: LEVER, CLUTCH ADJ.
60225-001 $20.64
7: PLATE, CLUTCH
60220-001 $2.93
8: DISCONTINUED
60483-001
$4.40
9: DISCONTINUED
175763-001
$9.25
10: DISCONTINUED
(TOYO) 173036-001
$999.99
11: DISCONTINUED
173263-001
$120.64
12: DISCONTINUED
173427-001
$22.24
13: GASKET, POINTS COVER
173443-001 $4.60
14: SHAFT, ADVANCER
173453-001 $102.11
15: PIN (3X5.2)
(3X5.2) 171702-001 $1.67
16: CLIP

161457-001 $2.15
17: DISCONTINUED
80638-001
$1.20
18: DISCONTINUED
79159-001
$13.91
19: WASHER
237597-001 $1.07
20: DISCONTINUED
238555-001
$0.69
21: OIL SEAL (15X24X5)
242670-001 $5.42
23: O-RING (9.8X2.4)
(9.8X2.4) 243941-001 $1.93
24: O-RING (23.5X2.6)
243942-001 $1.64
25: BOLT, HEX. (6X12)
(6X12) 245596-001 $0.48
26: SCREW, PAN (6X14)
(6X14) 247360-001 $0.43
27: NUT, HEX. (6MM)
(6MM) 249039-001 $1.48
28: WASHER, PLAIN (6MM)
(6MM) 249243-001 $0.22
29: PIN, SPLIT (2.0X15)
(2.0X15) 249379-001 $0.28
30: PIN, DOWEL (6X10)
(6X10) 5565-001 $0.93
31: BOLT, FLANGE (6X10)
(6X10) 254093-001 $0.88
32: BOLT, FLANGE (6X25)
(6X25) 254106-001 $0.91
33: BOLT, FLANGE (6X35)
254078-001 $0.88
34: BOLT, FLANGE (6X80)
254085-001 $1.62

www.ClassicCyclesOrg

SADDLEBAG

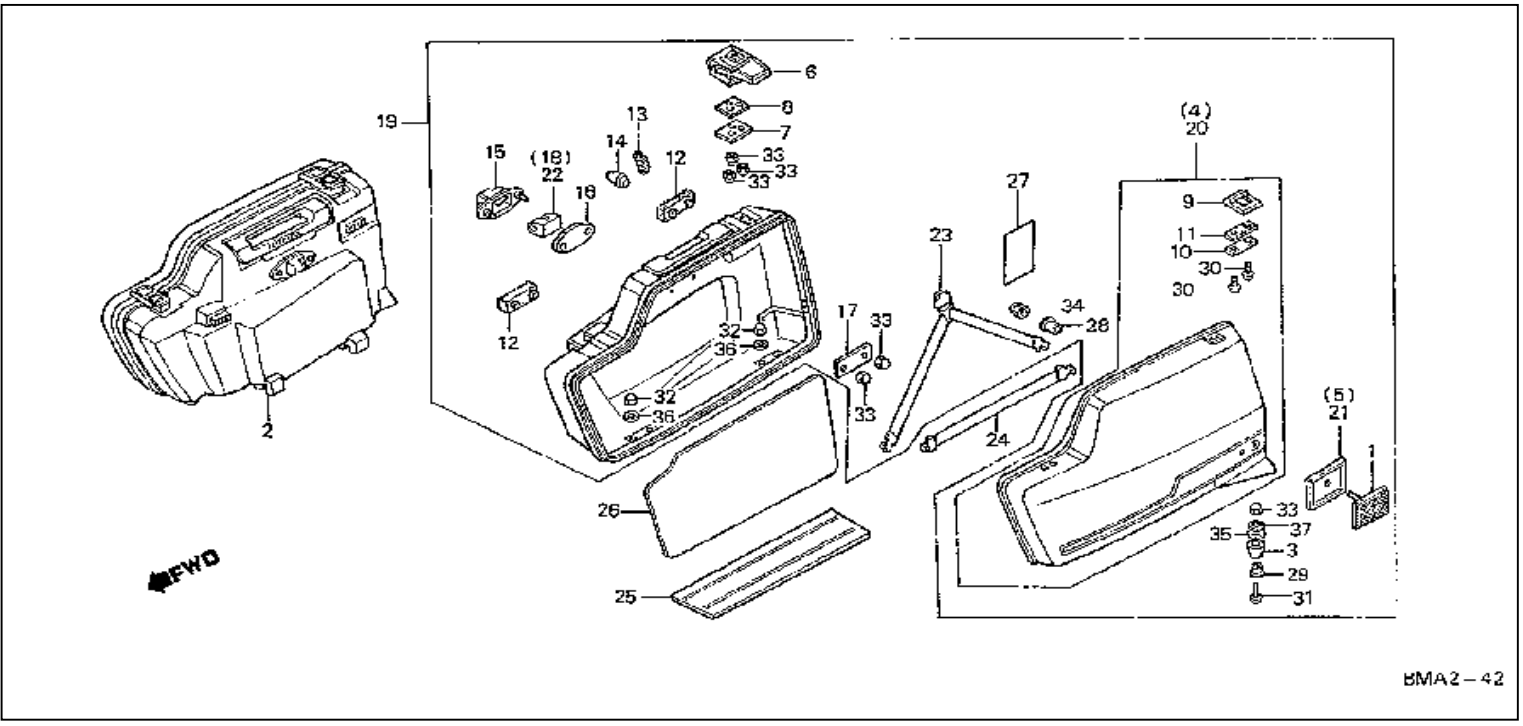

1: REFLECTOR, RR.
158177-001 $17.07
2: DISCONTINUED
(MAGNUM SILVER) 98764-001
$999.99
3: DISCONTINUED
97048-001
$999.99
4: DISCONTINUED
(MAGNUM SILVER) 97058-001
$152.36
5: BASE, R.
97095-001 $6.42
6: LOCK, SADDLEBAG
97129-001 $58.04
7: PLATE, LOCK
97169-001 $1.80
8: RUBBER, LOCK SEAL
97179-001 $4.80
9: DISCONTINUED
97312-001
$15.73
10: PLATE A, HOOK
97334-001 $1.58
11: RUBBER A, HOOK
97342-001 $1.93
12: DISCONTINUED
97474-001
$8.40
13: DISCONTINUED
97509-001
$1.83
14: DISCONTINUED
97515-001
$1.56
15: DISCONTINUED
97522-001
$14.78
16: DISCONTINUED
97524-001
$5.16
17: DISCONTINUED

Classic Cycles Technical Resources

97525-001
$3.44
18: DISCONTINUED
97528-001
$4.70
19: DISCONTINUED
(MAGNUM SILVER) 97806-001
$448.83
20: DISCONTINUED
(MAGNUM SILVER) 95983-001
$152.36
21: DISCONTINUED
95990-001
$5.64
22: DISCONTINUED
96207-001
$4.40
23: DISCONTINUED
96220-001
$16.93
24: DISCONTINUED
96221-001
$8.82
25: DISCONTINUED
96222-001
$11.87
26: DISCONTINUED
96233-001
$10.09
27: DISCONTINUED
84603-001
$4.82
28: COLLAR
234939-001 $2.33
29: DISCONTINUED
234974-001
$2.05
30: DISCONTINUED
247053-001
$999.99
31: SCREW, PAN (4X16)
247157-001 $0.60
32: DISCONTINUED
249121-001
$0.60
33: NUT, CAP (4MM)
(4MM) 249125-001 $0.49
34: NUT, CAP (6MM)
(6MM) 249134-001 $0.83
35: WASHER, PLAIN (4MM)
(4MM) 249233-001 $0.38
36: WASHER, SPRING (3MM)
(3MM) 249334-001 $0.15
37: WASHER, SPRING (4MM)
249336-001 $0.38

www.ClassicCyclesOrg

SEAT SEAT COWL

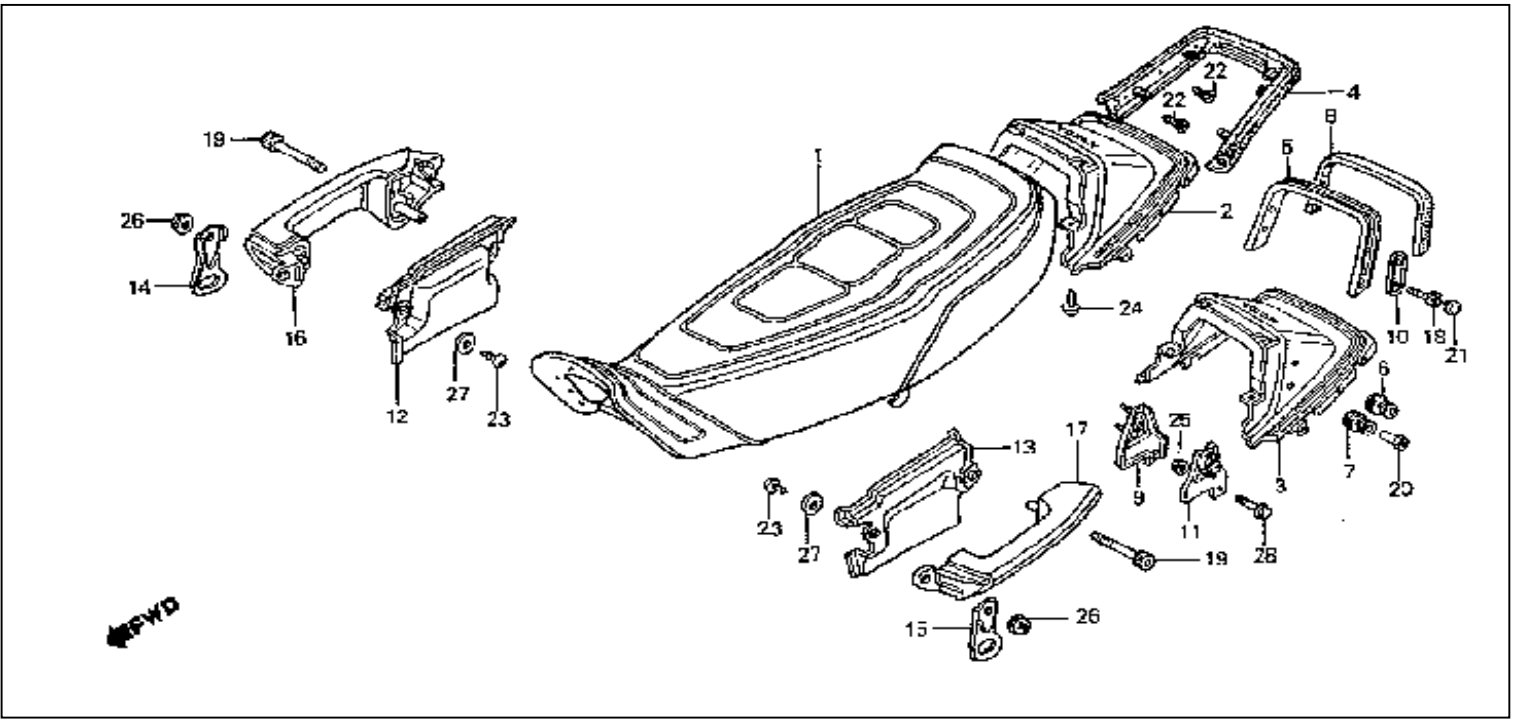

1: DISCONTINUED
105553-001
$999.99
2: DISCONTINUED
(MAGNUM SILVER) 103513-001
$166.55
4: DISCONTINUED
101745-001
$95.92
12: COVER, R. *NH110MU*
(MAGNUM SILVER) 99637-001 $31.31
13: COVER, L. *NH110MU*
(MAGNUM SILVER) 99640-001 $31.31
14: DISCONTINUED
93474-001
$11.02
15: DISCONTINUED
92732-001
$999.99
16: DISCONTINUED
91104-001
$85.95
17: DISCONTINUED
91282-001
$75.73
19: DISCONTINUED
234147-001
$4.56
22: DISCONTINUED
248528-001
$999.99
23: SCREW, TAP (5X20)
(5X20) 248715-001 $0.40
24: SCREW, TAP (6X16)
248724-001 $0.42
26: NUT, FLANGE (10MM)
249203-001 $0.80
27: WASHER, PLAIN (5MM)
(5MM) 249301-001 $0.38

Classic Cycles Technical Resources

SPARK UNIT RECTIFIER

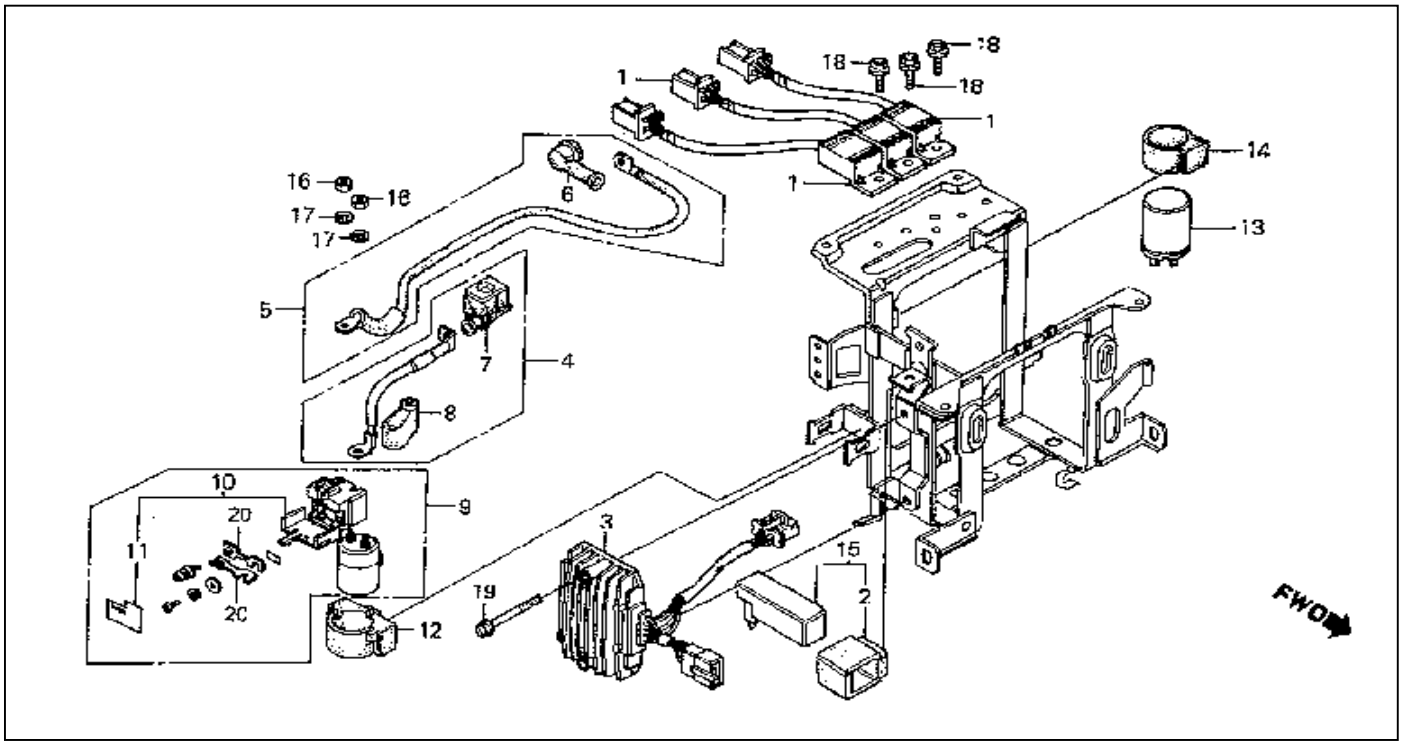

1: DISCONTINUED
(OKI) 173558-001
$999.99
2: RUBBER
173610-001 $4.22
3: DISCONTINUED
165538-001
$231.51
4: DISCONTINUED
162640-001
$20.56
5: DISCONTINUED
162845-001
$26.42
6: COVER
162918-001 $5.60
7: COVER, BATTERY
162998-001 $3.62
8: COVER B
163038-001 $2.73
9: SWITCH ASSY.
154294-001 $94.76
10: COVER, FUSE
154329-001 $8.73
11: LABEL, FUSE COVER
154336-001 $2.04
12: RUBBER
154350-001 $7.13
13: RELAY ASSY.,WINKE
(MITSUBA) 150981-001 $43.18
13: RELAY ASSY.,WINKE
(ND) 150982-001 $43.18
14: SUSPENSION
151019-001 $2.51
15: DISCONTINUED
149371-001
$999.99
16: NUT, HEX. (6MM)
(6MM) 249039-001 $1.48
17: WASHER, SPRING (6MM)
(6MM) 249343-001 $0.38

www.ClassicCyclesOrg

18: BOLT, FLANGE (6X10)
(6X10) 253224-001 $0.63
19: BOLT, FLANGE (6X40)
(6X40) 253395-001 $0.75
20: FUSE F (30A)
(30A) 255315-001 $0.75

Classic Cycles Technical Resources

STAND

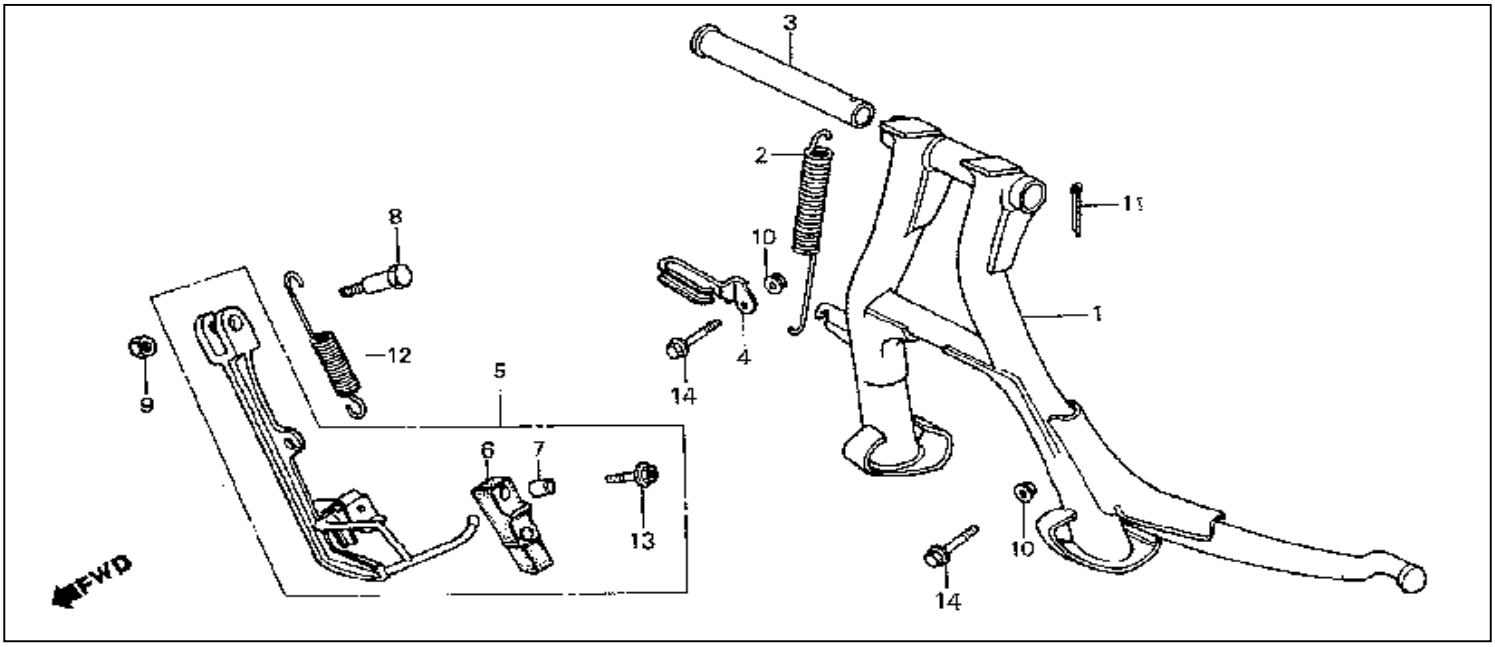

1: DISCONTINUED
129085-001
$78.69
2: DISCONTINUED
129206-001
$10.07
3: DISCONTINUED
129368-001
$15.82
4: DISCONTINUED
129392-001
$4.33
5: DISCONTINUED
129746-001
$96.53
6: RUBBER, STAND
129848-001 $6.87
7: COLLAR
129852-001 $1.69
8: DISCONTINUED
233284-001
$5.16
9: NUT, HEX. (12MM)
249070-001 $0.58
10: NUT, FLANGE (6MM)
(6MM) 249195-001 $0.20
11: PIN, COTTER (2.5MM)
(2.5MM) 249387-001 $0.45
12: SPRING D, SIDE STAND
253097-001 $1.80
13: DISCONTINUED
253236-001
$0.70
14: BOLT, FLANGE (6X40)
(6X40) 253398-001 $0.75

www.ClassicCyclesOrg

STARTING MOTOR

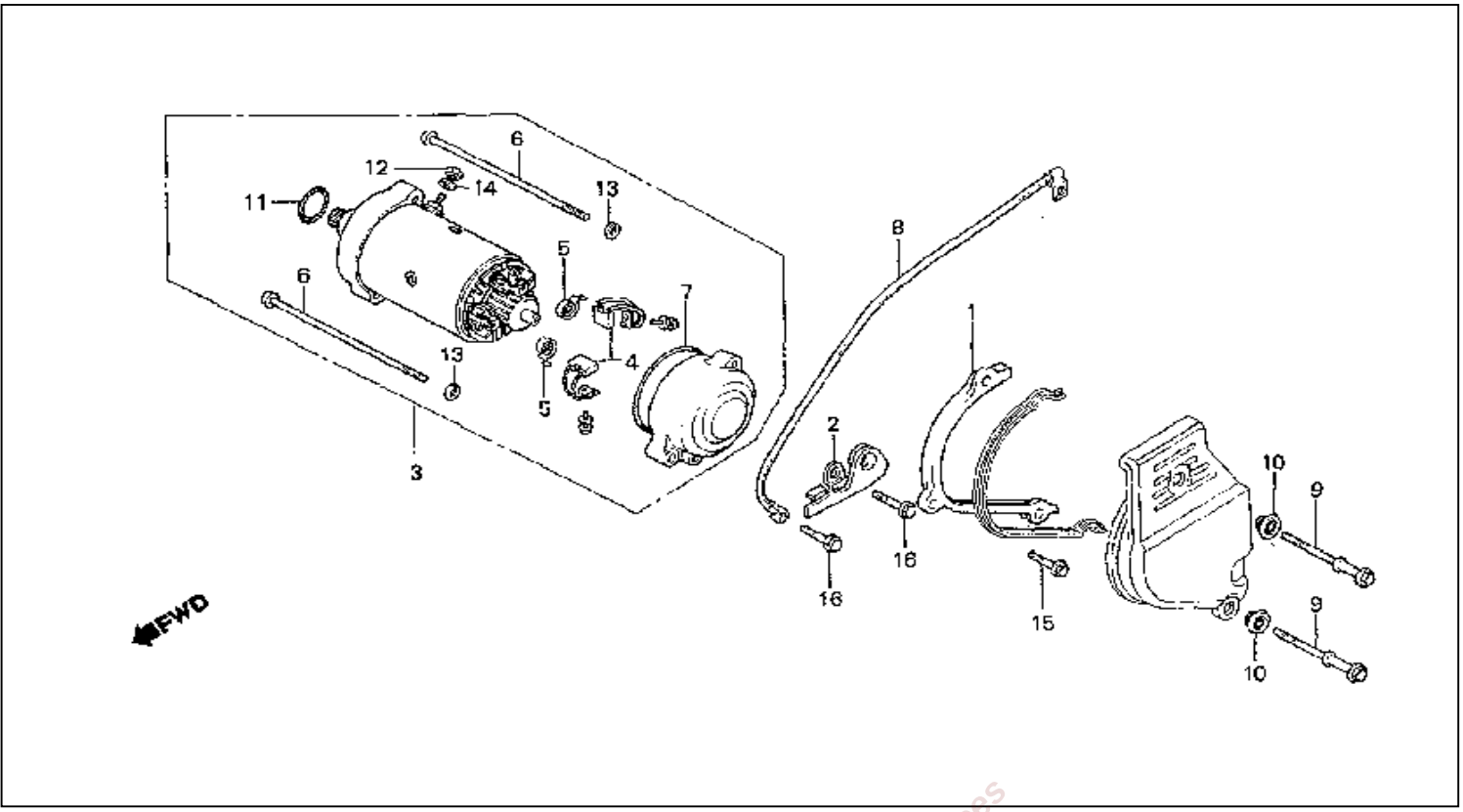

Classic Cycles Technical Resources

1: DISCONTINUED
198812-001
$22.57
2: DISCONTINUED
198852-001
$12.61
3: MOTOR ASSY., STARTER
168712-001 $532.95
4: BRUSH SET, CARBON
168822-001 $15.55
5: SPRING, CARBON BRUSH
168920-001 $2.33
6: BOLT
168946-001 $2.24
7: O-RING (60X1.4)
168984-001 $4.36
8: DISCONTINUED
163234-001
$21.85
9: DISCONTINUED
79288-001
$999.99
10: DISCONTINUED
239803-001
$3.53
11: O-RING (24.4X3.1)
(24.4X3.1) (ARAI) 244114-001 $4.56
12: NUT, HEX. (6MM)
(6MM) 249039-001 $1.48
13: WASHER, SPRING (5MM)
(5MM) 249338-001 $0.42
14: WASHER, SPRING (6MM)
(6MM) 249343-001 $0.38
15: BOLT, FLANGE (6X20)
(6X20) 253356-001 $0.52
16: BOLT, FLANGE (6X28)
(6X28) 254111-001 $0.87

TAILLIGHT

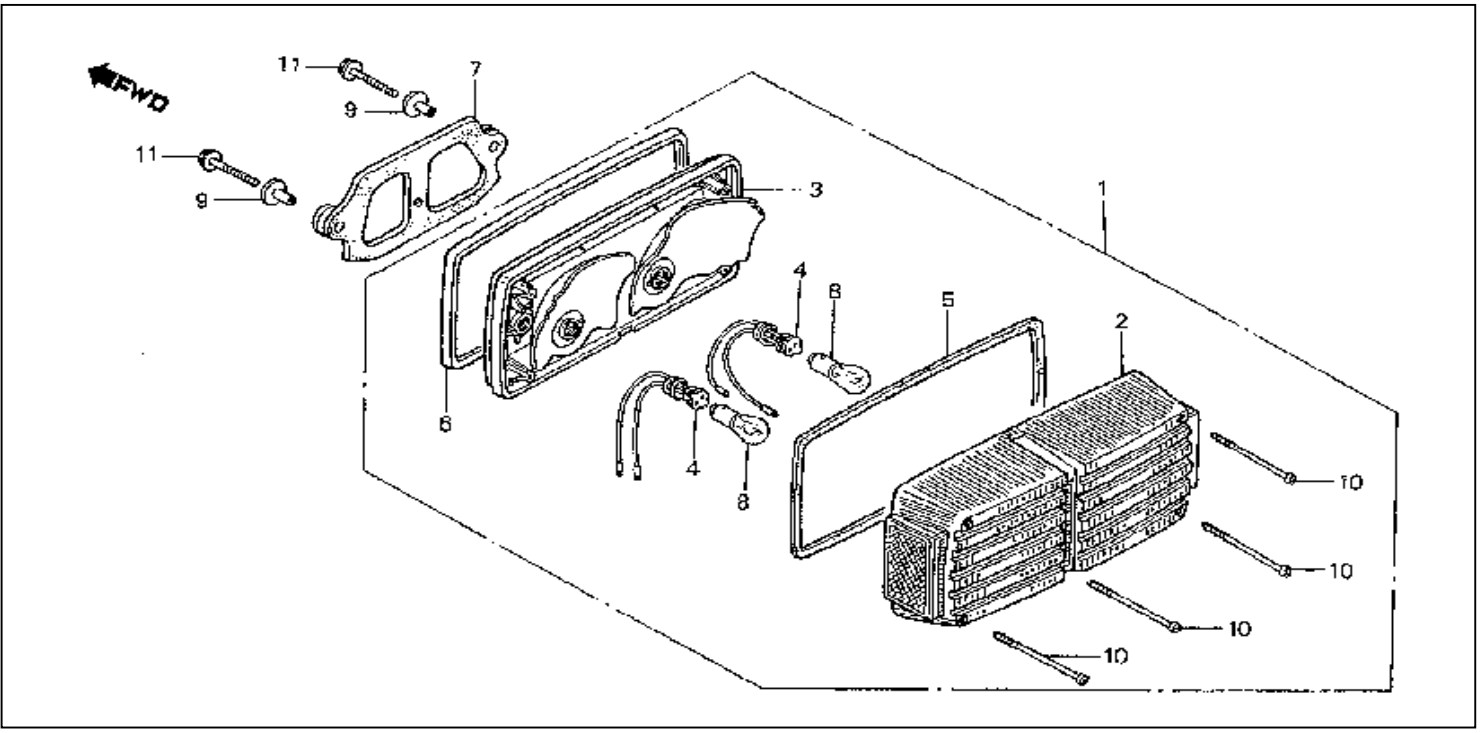

1: DISCONTINUED
159127-001
$195.16
2: LENS, TAILLIGHT
159249-001 $54.68
3: DISCONTINUED
159339-001
$88.16
4: CABLE, TAILLIGHT
157681-001 $8.45
5: GASKET
157719-001 $8.96
6: DISCONTINUED
157765-001
$16.13
7: RUBBER
157916-001 $12.60
8: BULB (12V27/7W)
(12V27/7W) (2057HD) (STANLEY) 158597-001 $2.25
9: COLLAR, FR. FENDER
115961-001 $3.71
10: SCREW, TAP (4X60)
235298-001 $1.58
11: BOLT, FLANGE (6X25)
(6X25) 253235-001 $0.68

www.ClassicCyclesOrg

TRANSMISSION

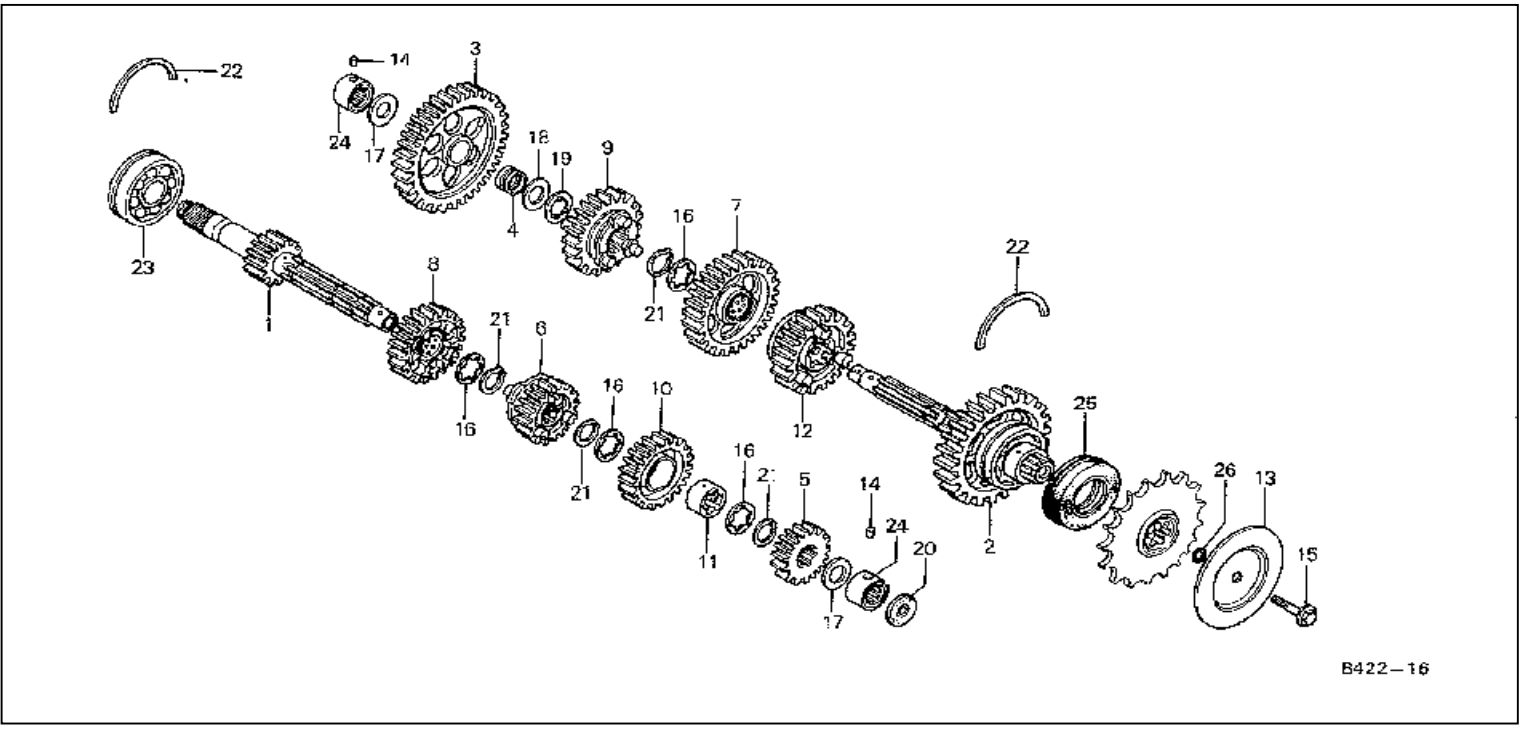

1: DISCONTINUED
(16T) 61144-001
$117.22
2: DISCONTINUED
62601-001
$223.20
3: DISCONTINUED
(39T) 59988-001
$96.13
4: COLLAR (24X17)
61394-001 $22.91
5: DISCONTINUED
(20T) 61355-001
$73.73
6: DISCONTINUED
(23T) 180294-001
$999.99
7: GEAR (32T)
(32T) 50754-001 $125.69
8: DISCONTINUED
(25T) 179038-001
$999.99
9: GEAR (30T)
(30T) 179275-001 $146.67
10: DISCONTINUED
(27T) 179497-001
$999.99
11: DISCONTINUED
179676-001
$21.38
12: DISCONTINUED
(28T) 179726-001
$110.62
13: DISCONTINUED
51095-001
$7.73
14: PIN
50470-001 $2.85
15: BOLT, SPECIAL (10MM)
(10MM) 79094-001 $5.02
16: WASHER (28MM)

Classic Cycles Technical Resources

(28MM) 238054-001 $5.02
17: DISCONTINUED
238186-001
$3.56
18: DISCONTINUED
238247-001
$3.09
19: DISCONTINUED
238291-001
$1.69
20: DISCONTINUED
239972-001
$7.00
21: CIRCLIP (28MM)
(OUTER) (28MM) 240109-001 $1.80
22: DISCONTINUED
Fr_Sr_No_To 2203923 240189-001
$999.99
23: DISCONTINUED
241846-001
$999.99
24: DISCONTINUED
242086-001
$999.99
25: OIL SEAL (40X62X13)
242970-001 $18.38
26: O-RING (9.8X2.4)
(9.8X2.4) 243941-001 $1.93

www.ClassicCyclesOrg

WIRE HARNESS

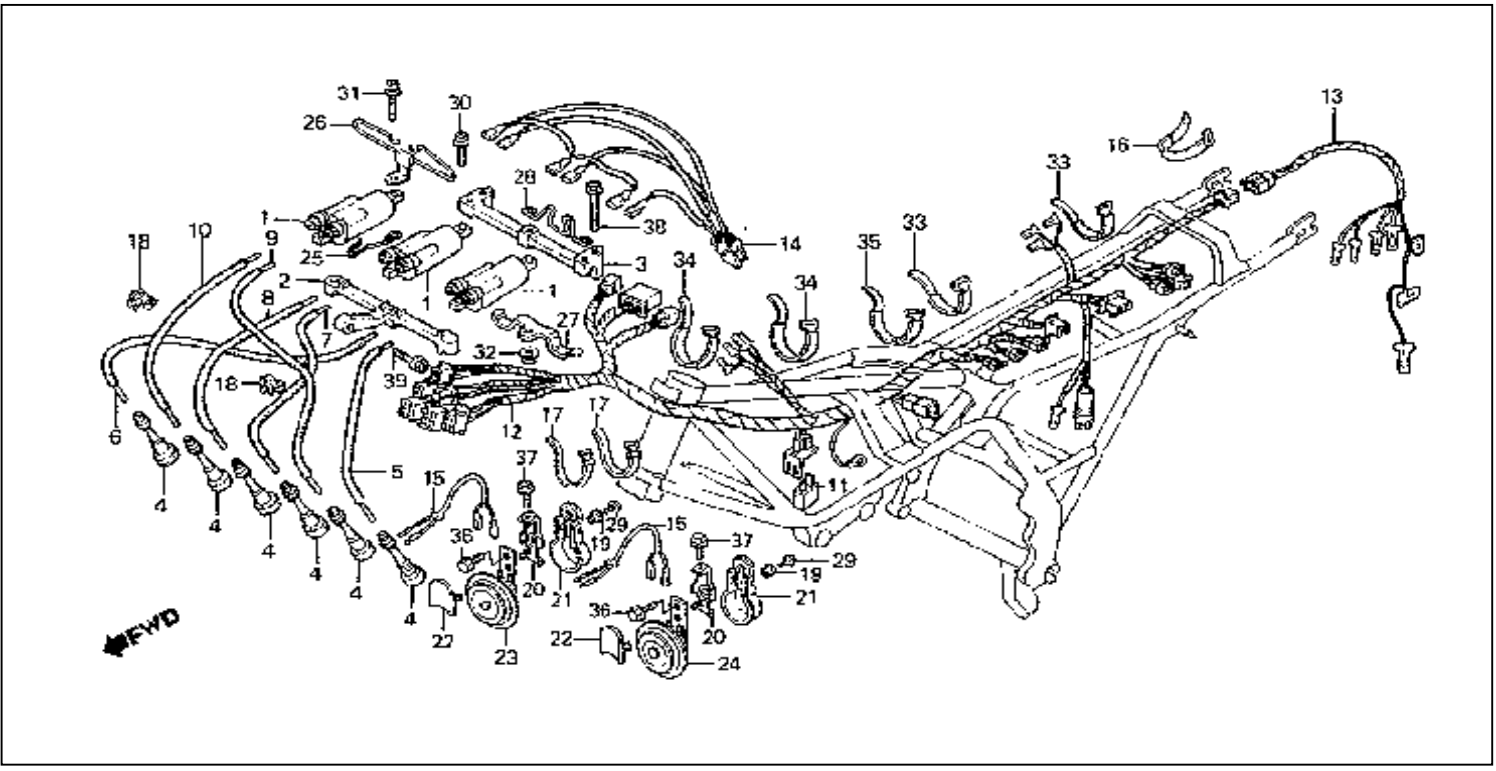

1: COIL ASSY., IGNITION
172285-001 $121.07
2: DISCONTINUED
172613-001
$13.40
3: DISCONTINUED
172622-001
$13.40
4: CAP ASSY.
171401-001 $9.64
5: CORD COMP,H/T
(4-2) 171513-001 $11.36
6: CORD COMP H/T
(1-1) 171518-001 $14.44
7: WIRE, IGNITION
(1-1) 171516-001 $10.69
8: WIRE, IGNITION
(1-1) 171516-001 $10.69
9: CORD COMP,H/T
(4-2) 171513-001 $11.36
10: WIRE, IGNITION
(1-1) 171516-001 $10.69
11: RECTIFIER, SILICON
(STANLEY) 165969-001 $17.42
12: DISCONTINUED
165297-001
$273.84
13: DISCONTINUED
163486-001
$19.82
14: DISCONTINUED
163565-001
$15.91
15: DISCONTINUED
163994-001
$6.00
16: BAND B1, CABLE
6078-001 $1.75
17: BAND, CABLE
164227-001 $3.11

Classic Cycles Technical Resources

18: DISCONTINUED
161598-001
$1.78
19: COLLAR, MOUNT
157937-001 $1.93
20: DISCONTINUED
150300-001
$999.99
21: DISCONTINUED
150315-001
$13.76
22: DISCONTINUED
150325-001
$6.05
23: HORN
(HIGH) (MITSUBA) 150386-001 $42.09
24: HORN (LOW)
(LOW) 150471-001 $50.00
25: GUIDE, COIL WIRE
128931-001 $3.42
26: GUIDE, CLUTCH CABLE
128936-001 $9.35
27: DISCONTINUED
128937-001
$4.11
28: DISCONTINUED
128938-001
$4.33
29: SCREW, PAN (4X8)
(4X8) 247127-001 $0.40
30: SCREW-WASHER (6X25)
248064-001 $0.68
31: DISCONTINUED
248070-001
$0.66
32: NUT, FLANGE (6MM)
(6MM) 249195-001 $0.20
33: BAND B1, CABLE
6078-001 $1.75
34: BAND A2, CABLE
253076-001 $1.23
35: BAND A3, CABLE
253077-001 $1.13
36: BOLT, FLANGE (6X10)
(6X10) 253224-001 $0.63
37: BOLT, FLANGE (6X12)
(6X12) 253336-001 $0.55
38: BOLT, FLANGE (6X32)
(6X32) 253387-001 $0.68
39: BOLT, FLANGE (6X20)
253701-001 $0.13

www.ClassicCyclesOrg